Multi-Contact

STÄUBLI

Photovoltaic main catalog

Solarline | Connectors for renewable energy

STÄUBLI ELECTRICAL CONNECTORS

Long-term solutions – Expert connections

Stäubli Electrical Connectors is a leading international manufacturer of high-quality electrical connector systems. We are part of the Stäubli Group which offers mechatronics solutions for electrical connectors, liquid and gas couplings, robots and textile machinery.

Stäubli develops, produces, sells and maintains products for markets with high productivity standards. As recognized specialists, our focus is always on solutions and customers. Many new developments got their start here and have begun to make their way around the world.

Businesses and customers count on our commitment and our active support when dealing with unusual problems. With us, you are entering into a long-term partnership built on reliability, dynamism, and exceptional quality in both products and services.

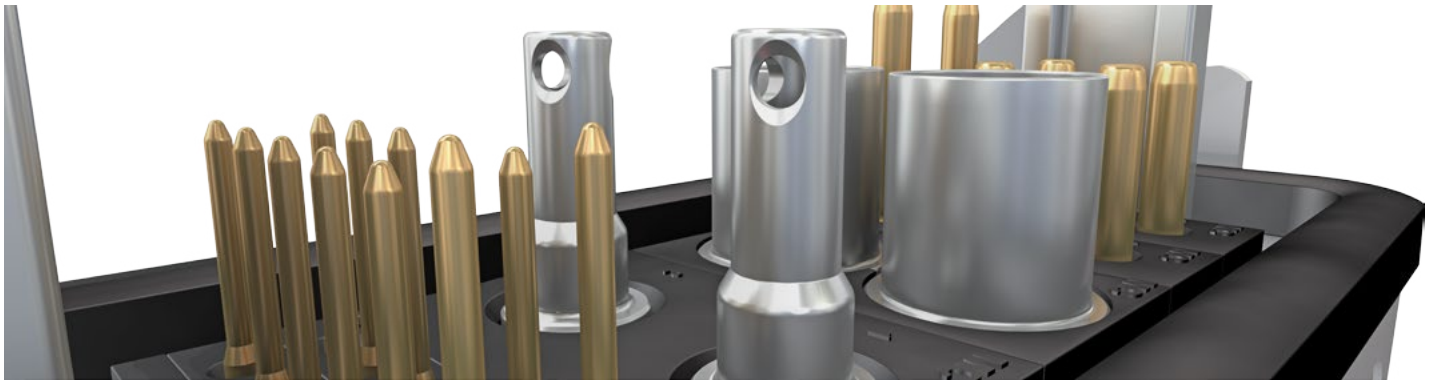

Applications and benefits

Offering a wide range of connection systems and accessories for photovoltaics, plug connectors, junction boxes and cables, we have been connecting any type of PV installation to the sun for more than 20 years. As a pioneer and global market leader for PV connectors, Stäubli has been setting the industry standard since the introduction of the original MC4 connector. In 2017, over 1 billion original MC4 connectors were installed to connect more than 150 GW which comes up to almost 50 % of the PV power worldwide.

Thanks to the tried and tested MULTILAM advanced contact technology, our connectors keep your PV installation up and running efficiently and safely.

These apparently minor components can have a massive impact. Outstanding reliability and consistently low contact resistance guarantee:

- Low service cost and reduced downtime
- Elimination of risks for hotspots and fire
- Low power losses

Stäubli PV connectors guarantee proper operation over their whole lifetime (>25 years). By minimizing risk and maximizing the return in the long term, our components influence LCOE positively and have a decisive impact on the bankability of photovoltaic projects.

Content

Page 7 **Introduction**
- Range of applications
- Advantages of Stäubli PV products

Page 8 **Plug connectors**
- Overview
- Product specifications

Page 38 **Junction boxes**
- Overview
- Product specifications

Page 50 **Cables**
- Flex-Sol-Evo
- In-line-Fuse
- Branch cable

Page 58 **Accessories**

Page 64 **Tools**

Page 72 **Forms**
- Forms for customer-specific products

Page 78 **Appendix**
- Technical information
- Alphabetical index

Safety note

Plug connectors that are not made by Stäubli but can be mated with Stäubli elements and are sometimes also described by their manufacturers as “Stäubli compatible”, do not conform to the requirements for a safe electrical connection with long-term stability and for safety reasons may not be plugged together with Stäubli elements. We therefore accept no liability if these connectors which are not approved by Stäubli are mated with Stäubli elements.

General information

Colour code

For those items available in various colours, replace the asterisk “*” with the appropriate colour code.

20	green-yellow	26	violet
21	black	27	brown
22	red	28	grey
23	blue	29	white
24	yellow	33	transparent
25	green		

Changes / Provisos

All data, illustrations and drawings in the catalogue have been carefully checked. They are in accordance with our experience to date, but no responsibility can be accepted for errors. We also reserve the right to make modifications for design and safety reasons. When designing equipment incorporating our components, it is therefore advisable not to rely solely on the data in the catalogue but to consult us to make sure this information is up to date. We shall be pleased to advise you.

Copyright

The use of this catalogue for any other purpose, in whatever form, without our prior written consent is not permitted.

RoHS ready

Directive 2011/65/EC on the restriction of the use of certain hazardous substances in electrical and electronic equipment.

Symbols

Accessories or special tools exist for this product

The assembly instruction MA000 is available for this product

Check out the interactive content for this product

UNLIMITED POSSIBILITIES FOR CONTACT SOLUTIONS

MULTILAM Technology

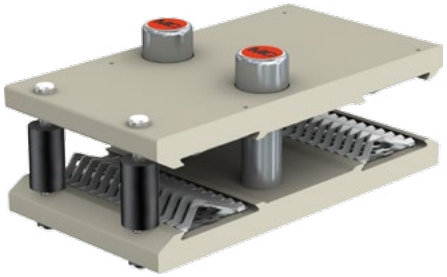

MULTILAM are specially formed and resilient contact elements. All Stäubli Electrical Connectors products benefit from the unique and outstanding performance of the MULTILAM Technology.

Thanks to their constant spring pressure, MULTILAM louvers ensure continuous contact with the contact surface, resulting in a constantly low contact resistance.

MULTILAM Technology allows to find solutions for connectors within the severest constraints and in certain products for up to 1 million mating cycles.

This makes the MULTILAM Technology the best choice for applications with demanding requirements:

- Reliable and longlife operation due to constantly high performance
- Safe operation under highest environmental demands on temperature, vibration and shock
- Suitable for data and signal contacts as well as high-current connectors
- Automated solutions with a high number of mating cycles

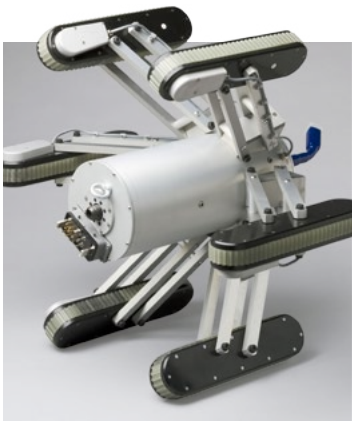

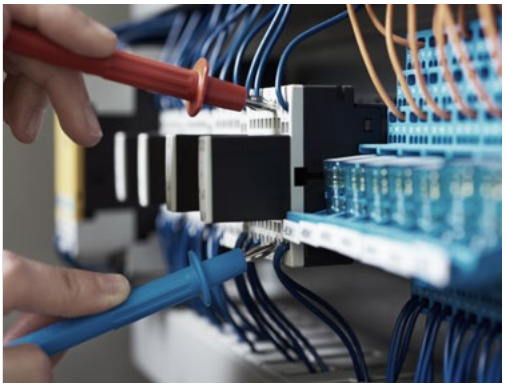

INTRODUCTION

Application possibilities of the Stäubli product portfolio

Examples of a PV field installation
The upper example shows the MC3 plug connector system (1) and the two-pole PV-JB-LC (2).

The ilustration in the middle shows the MC4 connector system (3) and the single-pole PV-JB/TB (4).

At the bottom an example of a PV roof installation with MC4 plug connector system (5), PV-JB/WL-... junction box (6) branch cable (7), branch socket/plug (8) and MC4 panel receptacles (9).

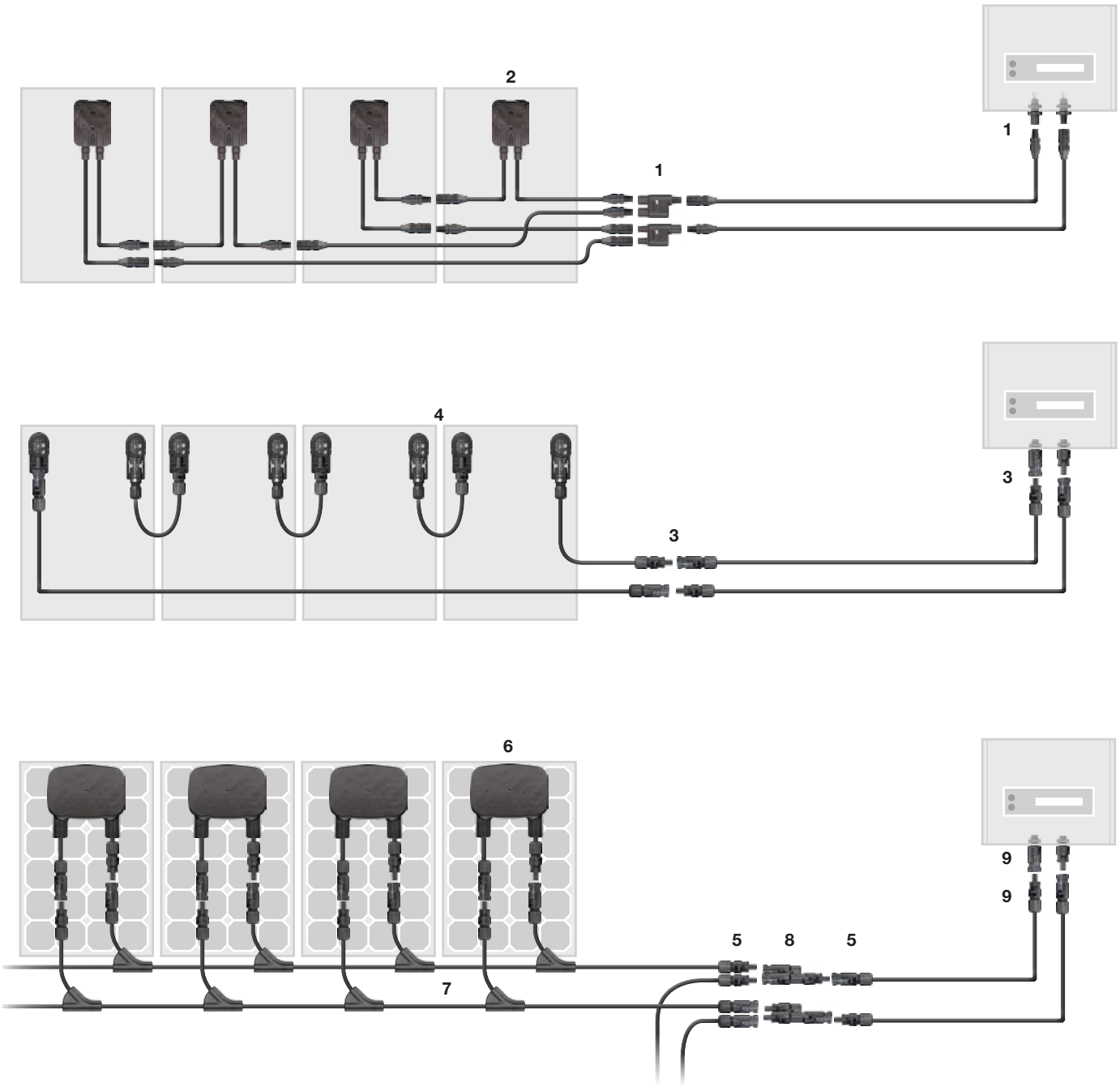

PLUG CONNECTORS

Advantages of the MC4 connector range

Protected

UV

IP68

Safety class II

Proven MULTILAM technology with high long-term stability

More than 50 years of experience and core competence

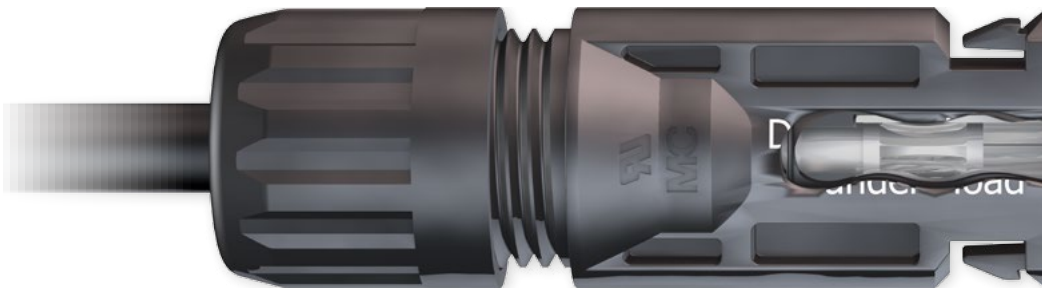

Range of cable cross-sections

10 mm²	◯	◯	8 AWG
6 mm²	◯	◯	10 AWG
4 mm²	○	○	12 AWG
2.5 mm²	○	○	14 AWG
1.5 mm²	○		

Locking system

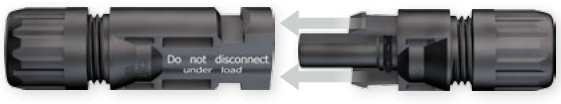

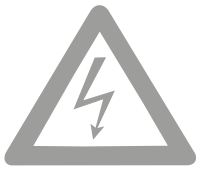

Voltage level

TÜV 1000 V/1500 V
UL 1000 V/1500 V

Compatibility

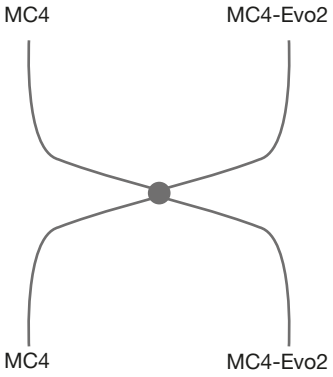

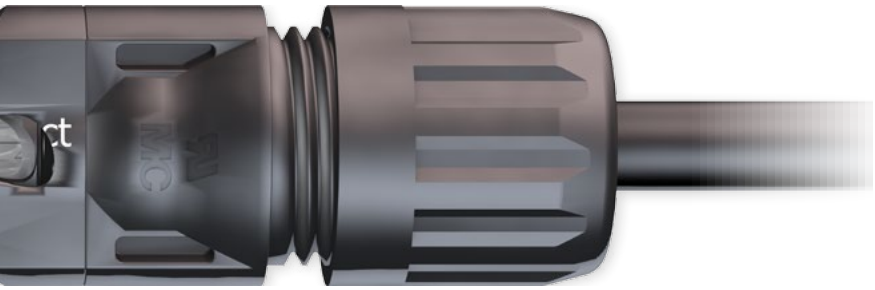

Certificates

TÜV These products are certified by TÜV Rheinland LGA Gmbh

cTÜVus

UL recognized

GOST-R

CSA

JET

CQC

Safety locking device

NEC 2014

Overview of plug connectors

	Approvals [1]
Plug connectors	
MC3	TÜV
MC4	TÜV
MC4-Evo2	TÜV
MC4-EvoAC	TÜV
Panel receptacles	
MC3	TÜV
MC4	TÜV
MC4-Evo2	TÜV
Branch connectors	
MC3	
MC4	

Legend

Assembly with tool

Available as ready-assembled product

For assembly on site

Features	Salt m ist spray test	Rated curren	Rated voltage (max.)				Locking system (UL)	Degree of protection		Safety class	Ambient temperature range	Sealing caps	Page
	Category	A	TÜV (V DC)	UL/CSA (V DC)	TÜV (V AC)	UL (V AC)		mated	unmated		°C		
	V	20/30/43	1000	600	–	–	Latching	IP65 IP67	IP2X	II	-40 ... +90 (TÜV)	×	12
	VI	17/22,5/ 30/45/50	1500	1500	–	–	Locking	IP65 IP68	IP2X	II	-40 ... +85 (TÜV)	×	14 16
	–	22/39/45/ 53/69	1500	1500	–	–	Locking	IP65 IP68	IP2X	II	-40...+85 (TÜV)	×	18 20
	–	16/20/26/ 32/43	–	–	250	600	Locking	IP65 IP67	IP2X	II	-40...+85 (TÜV)	×	22
	–	20/30	1000	–	–	–	Latching	IP65	IP2X	II	-40...+85 (TÜV)	×	24
	–	17/22.5/30	1250	1500	–	–	Locking	IP65 IP68	IP2X	II	-40...+90 (TÜV)	×	26 28
	–	32/42/47	1500	1500	–	–	Locking	IP65 IP68	IP2X	II	-40...+90 (UL)	×	30 32
	–	30	–	600	1000	–	Latching	IP65	IP2X	II	-40...+90 (UL)	×	34
	–	50	–	1500	–	–	Locking	IP67	IP2X	II	-40...+85 (UL)	×	36

Suitable for customer-specific assembly

[1] Certifications are in some cases limited to specific types or still pending. Details are given on the relevant product pages.

Female and male cable coupler MC3

Female and male cable coupler as individual part (including insulating part)

PV-KBT3...

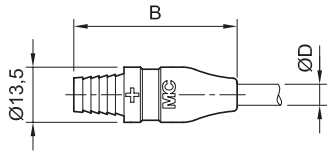

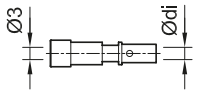

PV-KST3...

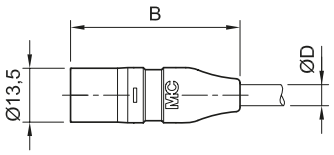

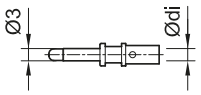

Order No.	Type	Female cable coupler	Male cable coupler		Cable outer diameter	Conductor cross section			Assembly device	Approvals
				B (mm)	Ø D (mm)	mm²	AWG	Ø di (mm)	PV-AWZ3	
32.0000-UR	PV-KBT3I-UR	×		40	3.2 – 4.8	2.5; 4	14; 12; 10	3	×	
32.0001-UR	PV-KST3I-UR		×	41.6	3.2 – 4.8	2.5; 4	14; 12; 10	3	×	
32.0002-UR	PV-KBT3II-UR	×		40	4.9 – 7.1	2.5; 4	14; 12; 10	3	×	
32.0003-UR	PV-KST3II-UR		×	41.6	4.9 – 7.1	2.5; 4	14; 12; 10	3	×	
32.0004-UR	PV-KBT3III-UR	×		50	6.5 – 9	2.5; 4	14; 12; 10	3	×	
32.0005-UR	PV-KST3III-UR		×	51.6	6.5 – 9	2.5; 4	14; 12; 10	3	×	
32.0006-UR	PV-KBT3/6III-UR	×		50	6.5 – 9	6		4	×	
32.0007-UR	PV-KST3/6III-UR		×	51.6	6.5 – 9	6		4	×	
32.0062	PV-KBT3/6IIA	×		51.6	4.9 – 7.1	6		4	×	
32.0063	PV-KST3/6IIA		×	51.6	4.9 – 7.1	6		4	×	
32.0032	PV-KBT3IV	×		50	6.5 – 9	10		5	×	
32.0033	PV-KST3IV		×	51.6	6.5 – 9	10		5	×	

Sealing caps page 62

Assembly tools page 64, 68

Assembly Instructions MA207

www.staubli.com/electrical

The original

- First series PV plug connector on the world market
- Proven MULTILAM technology with high long-term stability
- Has been installed millions of times over 20 years
- Available for assembly with cross sections of 10 mm^2
- Also available as ready made leads
- Leads made to customer's specifications, see page 74

Technical data	
Connector system	Ø 3 mm
Rated voltage	1000 V DC (TÜV) 600 V DC (UL)
Rated current TÜV (90 °C)	20 A (2.5 mm^2, 4 mm^2; 14 AWG, 12 AWG) 30 A (6 mm^2; 10 AWG) 43 A (10 mm^2)
Rated impulse voltage	12 kV
Ambient temperature range	-40 °C...+90 °C (TÜV) -40 °C...+75 °C (UL; 10 AWG, 12 AWG) -40 °C…+70 °C (UL; 14 AWG)
Upper limiting temperature	105 °C (TÜV)
Degree of protection, mated unmated	IP67 IP2X
Overvoltage category / Pollution degree	CATIII / 3
Contact resistance of plug connectors	≤ 0.5 mΩ
Safety class	II
Contact system	MULTILAM
Type of termination	Crimping
Contact material	Copper, tin plated
Insulation material	TPE / PA
Insertion force / Withdrawal force	≤ 50 N / ≥ 50 N
Locking system (UL)	Latching type
Flame class	UL94-HB / UL94-V0
Salt mist spray test, degree of severity 5	IEC 60068-2-52
TÜV-Rheinland certified, in accordance with EN 50521+A1 UL-recognized components, in accordance with UL 6703 CSA certified, in accordance with UL 6703	R60106496 E343181 250725

Female and male cable coupler MC4

Female and male cable coupler as individual part (including insulating part)

PV-KBT4...

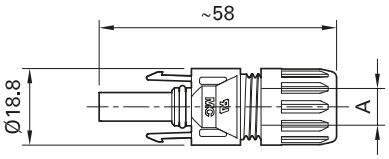

PV-KST4...

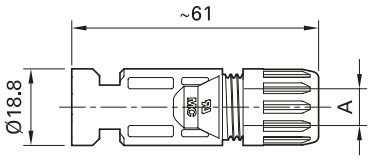

Order No.	Type	Female cable coupler	Male cable coupler	Ø range of cable gland	Conductor cross section			Approvals			
				A (mm)	mm²	AWG	b (mm)	TÜV	UR	CSA	CQC
32.0010P0001-UR	PV-KBT4/2,5I-UR	×		5-6	2.5	14	3	×	×	×	×
32.0011P0001-UR	PV-KST4/2,5I-UR		×	5-6	2.5	14	3				
32.0140P0001-UR	PV-KBT4/2,5X-UR	×		5.5-7.4	2.5	14	3				
32.0141P0001-UR	PV-KST4/2,5X-UR		×	5.5-7.4	2.5	14	3				
32.0012P0001-UR	PV-KBT4/2,5II-UR	×		5.9-8.8	2.5	14	3				
32.0013P0001-UR	PV-KST4/2,5II-UR		×	5.9-8.8	2.5	14	3				
32.0014P0001-UR	PV-KBT4/6I-UR	×		5-6	4; 6	12; 10	5				
32.0015P0001-UR	PV-KST4/6I-UR		×	5-6	4; 6	12; 10	5				
32.0142P0001-UR	PV-KBT4/6X-UR	×		5.5-7.4	4; 6	12; 10	5				
32.0143P0001-UR	PV-KST4/6X-UR		×	5.5-7.4	4; 6	12; 10	5				
32.0016P0001-UR	PV-KBT4/6II-UR	×		5.9-8.8	4; 6	12; 10	5				
32.0017P0001-UR	PV-KST4/6II-UR		×	5.9-8.8	4; 6	12; 10	5				
32.0080-UR	PV-KBT4/8II-UR	×		6.05-8.56	–	8	4.4		×	×	
32.0081-UR	PV-KST4/8II-UR		×	6.05-8.56	–	8	4.4				
32.0034P0001	PV-KBT4/10II	×		5.9-8.8	10	–	7.2	×			×
32.0035P0001	PV-KST4/10II		×	5.9-8.8	10	–	7.2				

Note:

For more detailed information concerning the suitable cable gland range, please consult MA231

MA

Assembly Instructions MA231

www.staubli.com/electrical

Sealing caps page 62

Assembly tools page 69

- Snap-in lock
- In accordance with NEC 2014, requires a tool to open
- Proven MULTILAM technology with high long-term stability, which ensures consistently low performance loss throughout the entire service life of the plug connector
- Tried and tested plug connectors, over 15 years of experience in the field
- Available for assembly with cross-sections of 10 mm²
- Also available as ready made leads
- Leads made to customer's specifications, see page 74

Technical data	
Connector system	Ø 4 mm
Rated voltage	1000 V DC (IEC 62852) 1500 V DC (2Pfg2330)[1)] 600 V DC / 1000 V DC / 1500 V DC (UL)[2)]
Rated current TÜV (85 °C)	17 A (1,5 mm²) 22,5 A (2,5 mm²) 39 A (4 mm²/6 mm²) 45 A (10 mm²)
Rated current UL	22,5 A (14 AWG) 30 A (12 AWG/10 AWG) 50 A (8 AWG)
Rated impulse voltage	12 kV (1000 V DC (TÜV)) 16 kV (1500 V DC (TÜV))
Ambient temperature range	-40 °C...+85 °C (TÜV) -40 °C...+75 °C (UL)
Upper limiting temperature	105 °C (TÜV)
Degree of protection, mated unmated	IP65, IP68 (1 h / 1 m) IP2X
Overvoltage category / Pollution degree	CATIII / 3
Contact resistance of plug connectors	≤ 0.25 mΩ
Safety class	1000 V DC: II 1500 V DC: 0
Contact system	MULTILAM
Type of termination	Crimping
Contact material	Copper, tin plated
Insulation material	PC / PA
Locking system (UL)	Locking type
Flame class	UL94-V0
Ammonia resistance (acc. to DLG)	1500 h, 70 °C / 70% RH, 750 ppm
Salt mist spray test, degree of severity 6	IEC 60068-2-52
TÜV-Rheinland certified, in accordance with IEC 62852 TÜV-Rheinland certified, in accordance with 2PfG2330 UL recognized component, in accordance with UL 6703 CSA certified, in accordance with UL 6703 CQC certified according CNCA/CTS0002-2012	R60111354[3)] R60087448 E343181 250725 CQC16024138286

[1)] 2Pfg2330: only approved for locations with restricted access

[2)] for selected configurations; see assembly instructions MA231 for details

[3)] For PV junction boxes in accordance with IEC62790, lines in accordance with EN50618 must be used

Female and male cable coupler MC4

Contacts on carrier band (including insulating part)

PV-KBT4...
PV-KST4...

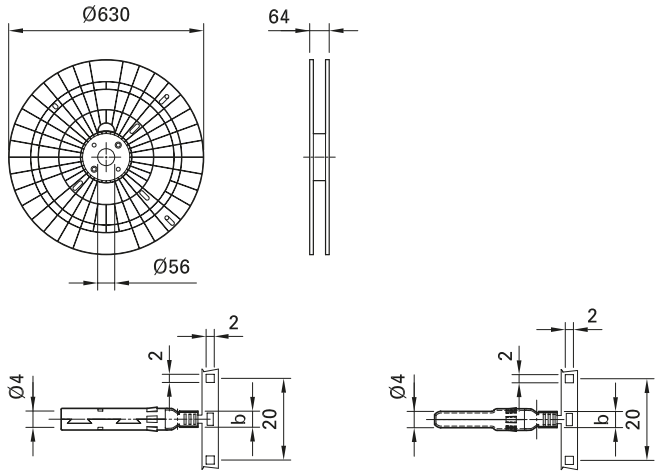

Order No.	Type	Female cable coupler	Male cable coupler	Ø range of cable gland	Conductor cross section			Crimping tool	Contacts per reel[2]	Approvals			
				A (mm)	mm²	AWG	b (mm)			TÜV			
32.0010P2000-UR	PV-KBT4/2,5I-UR	×		5-6	2.5	14	3	[1]	2000	×	×	×	×
32.0011P2000-UR	PV-KST4/2,5I-UR		×	5-6	2.5	14	3	[1]	2000				
32.0140P2000-UR	PV-KBT4/2,5X-UR	×		5.5-7.4	2.5	14	3	[1]	2000				
32.0141P2000-UR	PV-KST4/2,5X-UR		×	5.5-7.4	2.5	14	3	[1]	2000				
32.0012P2000-UR	PV-KBT4/2,5II-UR	×		5.9-8.8	2.5	14	3	[1]	2000				
32.0013P2000-UR	PV-KST4/2,5II-UR		×	5.9-8.8	2.5	14	3	[1]	2000				
32.0014P2000-UR	PV-KBT4/6I-UR	×		5-6	4; 6	12; 10	5	[1]	2000				
32.0015P2000-UR	PV-KST4/6I-UR		×	5-6	4; 6	12; 10	5	[1]	2000				
32.0142P2000-UR	PV-KBT4/6X-UR	×		5.5-7.4	4; 6	12; 10	5	[1]	2000				
32.0143P2000-UR	PV-KST4/6X-UR		×	5.5-7.4	4; 6	12; 10	5	[1]	2000				
32.0016P2000-UR	PV-KBT4/6II-UR	×		5.9-8.8	4; 6	12; 10	5	[1]	2000				
32.0017P2000-UR	PV-KST4/6II-UR		×	5.9-8.8	4; 6	12; 10	5	[1]	2000				
32.0034P1700	PV-KBT4/10II	×		5.9-8.8	10	–	7.2	[1]	1700	×			×
32.0035P1700	PV-KST4/10II		×	5.9-8.8	10	–	7.2	[1]	1700				

Note:
For more detailed information concerning the suitable cable gland range, please consult MA231

MA

Assembly Instructions MA231
www.staubli.com/electrical

Sealing caps page 62
Assembly tools page 69

- Feeder bands for fully automatic assembly
- Tools specially designed for MC4 are available for automatic crimping
- Process reliability as result of specially developed supply reel

Technical data	
Connector system	Ø 4 mm
Rated voltage	1000 V DC (IEC 62852) 1500 V DC (2Pfg2330)[3)] 600 V DC / 1000 V DC / 1500 V DC (UL)[4)]
Rated current TÜV (85 °C)	17 A (1,5 mm^2) 22,5 A (2,5 mm^2) 39 A (4 mm^2/6 mm^2) 45 A (10 mm^2)
Rated current UL	22,5 A (14 AWG) 30 A (12 AWG/10 AWG) 50 A (8 AWG)
Rated impulse voltage	12 kV (1000 V DC (TÜV)) 16 kV (1500 V DC (TÜV))
Ambient temperature range	-40 °C...+85 °C (TÜV); -40 °C...+75 °C (UL)
Upper limiting temperature	105 °C (TÜV)
Degree of protection, mated unmated	IP65, IP68 (1 h / 1 m) IP2X
Overvoltage category / Pollution degree	CATIII / 3
Contact resistance of plug connectors	≤ 0.25 mΩ
Safety class	1000 V DC: II 1500 V DC: 0
Contact system	MULTILAM
Type of termination	Crimping
Contact material	Copper, tin plated
Insulation material	PC / PA
Locking system (UL)	Locking type
Flame class	UL94-V0
Ammonia resistance (acc. to DLG)	1500 h, 70 °C / 70% RH, 750 ppm
Salt mist spray test, degree of severity 6	IEC 60068-2-52
TÜV-Rheinland certified, in accordance with IEC 62852 TÜV-Rheinland certified, in accordance with 2PfG2330 UL recognized component, in accordance with UL 6703 CSA certified, in accordance with UL 6703 CQC certified according CNCA/CTS0002-2012	R60111354[5)] R60087448 E343181 250725 CQC16024138286

[1)] Information about a semi-automatic crimp device or assembly device on request
[2)] Reel type subject to alterations
[3)] 2Pfg2330: Only for use in PV-systems with restricted access locations
[4)] For selected configurations; see assembly instructions MA231 for details
[5)] For PV junction boxes in accordance with IEC62790, lines in accordance with EN50618 must be used

Female and male cable coupler MC4-Evo2

Female and male cable coupler as individual part (including insulating part)

PV-KBT4-EVO 2/...-UR

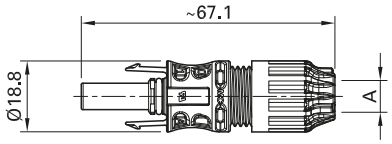

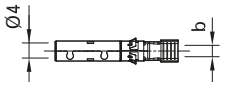

PV-KST4-EVO 2/...-UR

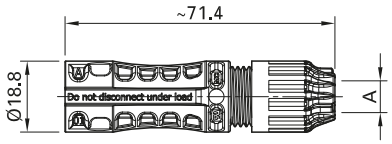

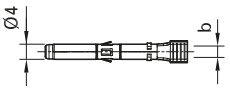

Order No.	Type	Female cable coupler	Male cable coupler	Ø range of cable gland	Conductor cross section			Approvals
				A (mm)	mm²	AWG	b (mm)	
32.0082P0001-UR	PV-KBT4-EVO 2/2,5I-UR	x		4.7-6.4	2.5	14	3	TÜV, cULus, JET, TÜVRheinland
32.0083P0001-UR	PV-KST4-EVO 2/2,5I-UR		x					
32.0084P0001-UR	PV-KBT4-EVO 2/2,5II-UR	x		6.4-8.4				
32.0085P0001-UR	PV-KST4-EVO 2/2,5II-UR		x					
32.0086P0001-UR	PV-KBT4-EVO 2/6I-UR	x		4.7-6.4	4; 6	12; 10	5	
32.0087P0001-UR	PV-KST4-EVO 2/6I-UR		x					
32.0088P0001-UR	PV-KBT4-EVO 2/6II-UR	x		6.4-8.4				
32.0089P0001-UR	PV-KST4-EVO 2/6II-UR		x					
32.0092P0001-UR	PV-KBT4-EVO 2/10II-UR	x			10	8	7.2	
32.0093P0001-UR	PV-KST4-EVO 2/10II-UR		x					

Note:

For more detailed information concerning the suitable cable gland range, please consult MA273.

Sealing caps page 62

Assembly tools page 69

MA

Assembly Instructions MA273

www.staubli.com/electrical

- Internationally certified with IEC, UL, JET, cTÜVus.
- Approved for 1500 V DC (IEC, JET), 1500 V DC (UL) unrestricted access
- MULTILAM Technology, has proven the quality and durability several 100 million times since 2004
- Suited for all climatic environments thanks to resistance to UV, ammonia, and high IP class (IP68).
- Available as a field and preassembled connector, standard crimping tools can be used.

Technical data	
Connector system	Ø 4 mm
Rated voltage	1000 V DC / 1500 V DC (TÜV) [1] 600 V DC / 1000 V DC / 1500 V DC (UL) [2] 1500 V DC (JET) [3]
Rated current TÜV (85 °C)	39 A (2.5 mm^2 / 14 AWG) 45 A (4.0 mm^2 / 12 AWG) 53 A (6.0 mm^2 / 10 AWG) 69 A (10.0 mm^2 / 8 AWG)
Rated impulse voltage	12 kV (1000 V) 16 kV (1500 V)
Ambient temperature range	-40 °C ... +85 °C (TÜV / UL)
Upper limiting temperature	115 °C (TÜV)
Degree of protection, mated unmated	IP65 / IP68 (1h / 1m) IP2X
Overvoltage category / Pollution degree	CAT III / 3
Contact resistance of plug connectors	≤ 0.2 mΩ
Safety class	II
Contact system	MULTILAM
Type of termination	Crimping
Contact material	Copper, tin plated
Insulation material	PA
Locking system (UL)	Locking type
Flame class	UL94-V0
Ammonia resistance (acc. to TÜV)	Q60095359
TÜV-Rheinland certified, in accordance with IEC 62852:2014 UL recognized component, in accordance with UL 6703 cTÜVus certified according UL 6703 JET certified according IEC 61730-1:2004	R60098495 E343181 CU 72141256 01 1625-C4302-167

[1] Please take the cable to be used from MA273

[2] The connectors are to be used with USE2 or PV-Wire cables.

[3] The connectors are to be used with cables with the "S-JET mark" label.

Female and male cable coupler MC4-Evo2

Contacts on carrier band (including insulating part)

PV-KBT4-EVO 2/...-UR
PV-KST4-EVO 2/...-UR

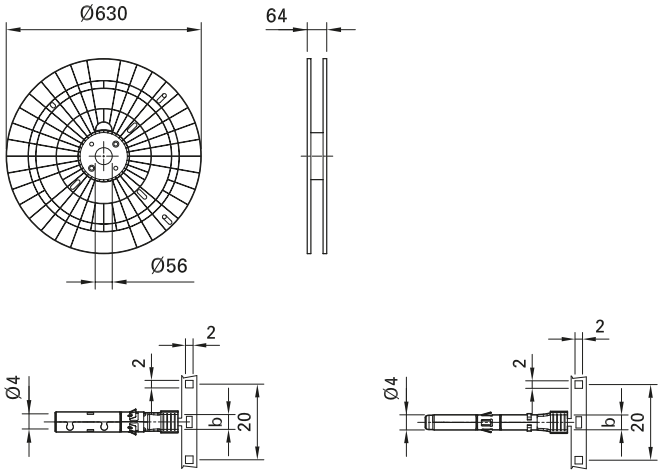

Order No.	Type	Female cable coupler	Male cable coupler	Ø range of cable gland	Conductor cross section			Crimping tool	Contacts per reel[2)]	Approvals
				A (mm)	mm²	AWG	b (mm)			
32.0082P2000-UR	PV-KBT4-EVO 2/2,5I-UR	x		4.7-6.4	2.5	14	3	1)	2000	
32.0083P2000-UR	PV-KST4-EVO 2/2,5I-UR		x					1)	2000	
32.0084P2000-UR	PV-KBT4-EVO 2/2,5II-UR	x		6.4-8.4				1)	2000	
32.0085P2000-UR	PV-KST4-EVO 2/2,5II-UR		x					1)	2000	
32.0086P2000-UR	PV-KBT4-EVO 2/6I-UR	x		4.7-6.4	4; 6	12; 10	5	1)	2000	
32.0087P2000-UR	PV-KST4-EVO 2/6I-UR		x					1)	2000	
32.0088P2000-UR	PV-KBT4-EVO 2/6II-UR	x		6.4-8.4				1)	2000	
32.0089P2000-UR	PV-KST4-EVO 2/6II-UR		x					1)	2000	
32.0092P1700-UR	PV-KBT4-EVO 2/10II-UR	x			10	8	7.2	1)	1700	
32.0093P1700-UR	PV-KST4-EVO 2/10II-UR		x					1)	1700	

Note:
For more detailed information concerning the suitable cable gland range, please consult MA273.

Sealing caps page 62
Assembly tools page 69

MA

Assembly Instructions MA273
www.staubli.com/electrical

- Internationally certified with IEC, UL, JET, cTÜVus.
- Approved for 1500 V DC (IEC, JET), 1500 V DC (UL) unrestricted access
- MULTILAM Technology, has proven the quality and durability several 100 million times since 2004
- Suited for all climatic environments thanks to resistance to UV, ammonia, and high IP class (IP68).

Technical data	
Connector system	Ø 4 mm
Rated voltage	1000 V DC / 1500 V DC (TÜV) [3] 600 V DC / 1000 V DC / 1500 V DC (UL) [4] 1500 V DC (JET) [5]
Rated current TÜV (85 °C)	39 A (2.5 mm²/14 AWG) 45 A (4.0 mm²/12 AWG) 53 A (6.0 mm²/10 AWG) 69 A (10.0 mm²/8 AWG)
Rated impulse voltage	12 kV (1000 V) 16 kV (1500 V)
Ambient temperature range	-40 °C ... +85 °C (TÜV / UL)
Upper limiting temperature	115 °C (TÜV)
Degree of protection, mated unmated	IP65 / IP68 (1h / 1m) IP2X
Overvoltage category / Pollution degree	CAT III / 3
Contact resistance of plug connectors	≤ 0.2 mΩ
Safety class	II
Contact system	MULTILAM
Type of termination	Crimping
Contact material	Copper, tin plated
Insulation material	PA
Locking system (UL)	Locking type
Flame class	UL94-V0
Ammonia resistance (acc. to TÜV)	Q60095359
TÜV-Rheinland certified, in accordance with IEC 62852:2014 UL recognized component, in accordance with UL 6703 cTÜVus certified according UL 6703 JET certified according IEC 61730-1:2004	R60098495 E343181 CU 72141256 01 1625-C4302-167

[1] Information about a semi-automatic crimp device or assembly device on request
[2] Reel type subject to alterations
[3] Please take the cable to be used from MA273
[4] The connectors are to be used with USE2 or PV-Wire cables.
[5] The connectors are to be used with cables with the “S-JET mark” label

Female and male cable coupler MC4-EvoAC

Preassembled with cable

MC-K...PV-AC1/B...

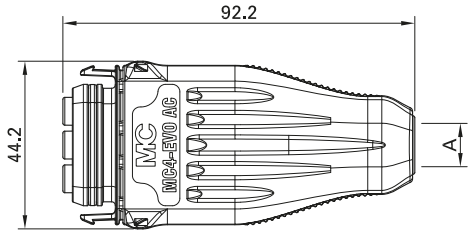

MC-K...PV-AC1/S...

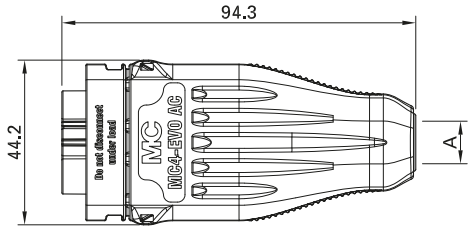

Order No.	Type	Female cable coupler	Male cable coupler	Conductor cross section		Cable		Rated voltage		Approvals	
				mm²	AWG	Type	Length (cm)	TÜV (V AC)	UL (V AC)	TÜV	
32.1208-10021	MC-K1,5Y3/PV-AC1/BI/100	×		1.5	–	BETAFlam Solar AC flex FRNC	100	250	–	×	
32.1209-10021	MC-K1,5Y3/PV-AC1/SI/100		×	1.5	–						
32.1210-10021	MC-K2,5Y3/PV-AC1/BII/100	×		2.5	–						
32.1211-10021	MC-K2,5Y3/PV-AC1/SII/100		×	2.5	–						
32.1212-10021	MC-K4Y3/PV-AC1/BIII/100	×		4	–						
32.1213-10021	MC-K4Y3/PV-AC1/SIII/100		×	4	–						
32.1214-10021	MC-K1,5Z3/PV-AC1/BII/100	×		–	16	Baohing		–	600		×
32.1215-10021	MC-K1,5Z3/PV-AC1/SII/100		×	–	16						
32.1216-10021	MC-K2,5Z3/PV-AC1/BII/100	×		–	14						
32.1217-10021	MC-K2,5Z3/PV-AC1/SII/100		×	–	14						
32.1218-10021	MC-K4Z3/PV-AC1/BIII/100	×		–	12						
32.1219-10021	MC-K4Z3/PV-AC1/SIII/100		×	–	12						

MA

Assembly Instructions MA284

www.staubli.com/electrical

Sealing caps page 62

Assembly tools page 69

- AC plug connector for micro, nano, and string inverters.
- 250 V (IEC) 600 V (UL)
- MULTILAM technology
- Available preassembled from the factory
- Protection class IP65/IP67
- IP2X unmated protected against contact
- Various codings possible
- Compact form for hidden installation in the module frame or for stackable modules

Technical data	
Connector system	MC4
Rated voltage	250 V AC (TÜV) 600 V AC (UL)
Rated current TÜV (85 °C)	1.5 mm^2: 16 A 2.5 mm^2: 20 A 4.0 mm^2: 26 A
Rated current UL (85 °C)	16AWG: 26 A 14AWG: 32 A 12AWG: 43 A
Rated impulse voltage	4 kV
Ambient temperature range	-40 °C...+85 °C (TÜV) -40 °C...+70 °C (UL)
Upper limiting temperature	115 °C (TÜV)
Degree of protection, mated unmated	IP65/IP67 IP2X
Overvoltage category / Pollution degree	CATIII/3
Contact resistance of plug connectors	0,25 mΩ
Safety class	II (mated condition)
Contact system	MULTILAM
Type of termination	Crimping
Contact material	Copper, tin plated
Insulation material	PC
Locking system (UL)	Snap-in
Flame class	UL94-V1
TÜV-Rheinland certified, in accordance with 2 Pfg 1915 UL recognized component, in accordance with UL 6703	R60101633 E467440

Female and male panel receptacle MC3

PV-ADBP3...

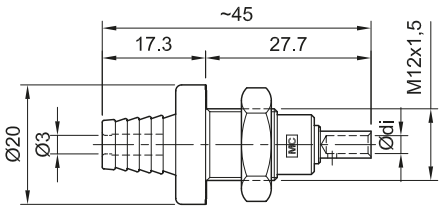

PV-ADSP3...

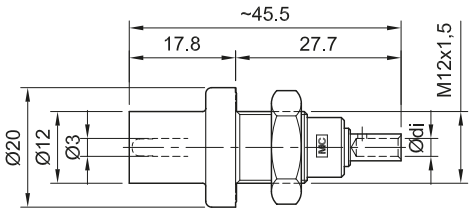

Order No.	Type	Female cable coupler	Male cable coupler	Cable connection	Conductor cross section	Approvals
				Ø di (mm)	mm²	
32.0052	PV-ADBP3/GWD	×		3	2.5; 4	TÜV
32.0053	PV-ADSP3/GWD		×	3	2.5; 4	
32.0048	PV-ADBP3/6/GWD	×		4	6	
32.0049	PV-ADSP3/6/GWD		×	4	6	

Sealing caps page 62

Special socket wrench insert page 68

MA

Assembly Instructions MA223

www.staubli.com/electrical

- MC3 panel-receptacle connectors are the interface between an inverter or junction box or junction and a branch cable
- Mounting directly by means of screw thread or in perforated plate with locknut (included in delivery)
- Rapid, precise plugging
- Protection class IP65 guarantees the highest connection safety
- Mating compatibility with MC3

Technical data	
Connector system	Ø 3 mm
Rated voltage	1000 V DC (TÜV)
Rated current TÜV (85 °C)	20 A (2.5 mm^2, 4 mm^2) 30 A (6 mm^2)
Test voltage	12 kV (50 Hz, 1 min.)
Ambient temperature range	-40 °C...+85 °C (TÜV)
Upper limiting temperature	105 °C (TÜV)
Degree of protection, mated unmated	IP65 IP2X
Overvoltage category / Pollution degree	CATIII / 3
Contact resistance of plug connectors	≤ 0.5 mΩ
Safety class	II
Contact system	MULTILAM
Type of termination	Crimping
Contact material	Copper, tin plated
Insulation material	PA
Locking system (UL)	Latching type
Flame class	UL94-V0
TÜV-Rheinland certified according EN 50521+A1	R60106496

Note:
Custom made special versions with cable are also available. Lengths and choice of cable ends on request, see page 74

Female and male panel receptacle MC4

Female and male panel receptacles as individual part (including insulating part)

PV-ADBP4-S2...

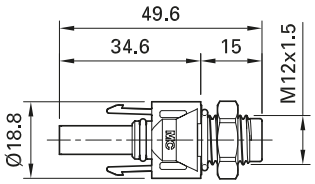

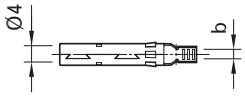

PV-ADSP4-S2...

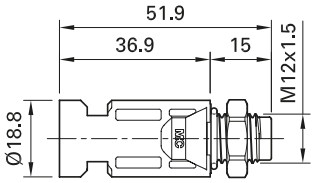

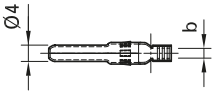

Order No.	Type	Female cable coupler	Male cable coupler	Conductor cross section			Approvals		
				mm²	AWG	b (mm)	TÜV		
32.0076P0001-UR	PV-ADBP4-S2/2.5-UR	×		1.5; 2.5	14	3	×	×	×
32.0077P0001-UR	PV-ADSP4-S2/2.5-UR		×	1.5; 2.5	14	3			
32.0078P0001-UR	PV-ADBP4-S2/6-UR	×		4; 6	12; 10	5			
32.0079P0001-UR	PV-ADSP4-S2/6-UR		×	4; 6	12; 10	5			
32.0150P0001	PV-ADBP4-S2/10	×		10		7.2	×		
32.0151P0001	PV-ADSP4-S2/10		×	10		7.2			

Note:

For more detailed information concerning the suitable cable gland range, please consult MA275.

Sealing caps page 62

Special socket wrench insert page 68

Unlocking tool page 69

MA

Assembly Instructions MA275

www.staubli.com/electrical

- MC4 panel-receptacle connectors are the interface between an inverter or junction box or junction and a branch cable
- Mounting directly by means of screw thread or in perforated plate with plastic nut (included in delivery)
- Rapid, precise plugging
- Protection class IP68 (1 m/1 h) guarantees the highest connection safety
- Mating compatibility with MC4 connector family
- Includes sealing element for enclosure

Technical data	
Connector system	Ø 4 mm
Rated voltage	1000 V DC / 1250 V DC (TÜV) 1000 V DC / 1500 V DC (UL)
Rated current TÜV (85 °C)	17 A (1.5 mm^2) 22.5 A (2.5 mm^2; 14 AWG) 39 A (4 mm^2; 12 AWG) 45 A (6 mm^2; 10 AWG) 51 A (10 mm^2)
Rated impulse voltage	12 kV (1000 V) / 16 kV (1250 V)
Ambient temperature range	-40 °C...+85 °C (TÜV) -40 °C...+75 °C (UL)
Upper limiting temperature	105 °C (TÜV)
Degree of protection, mated unmated	IP65; IP68 (1 m/1 h) IP2X
Overvoltage category / Pollution degree	CATIII / 3
Contact resistance of plug connectors	≤ 0.25 mΩ
Safety class	II
Contact system	MULTILAM
Type of termination	Crimping
Contact material	Copper, tin plated
Insulation material	PC / PA
Locking system (UL)	Locking type
Flame class	UL94-V0
TÜV-Rheinland certified, in accordance with IEC 62852 UL recognized component, in accordance with UL 6703 CSA certified, in accordance with UL 6703	R60110077 E356494 250725

Note:
Custom made special versions with cable are also available. Lengths and choice of cable ends on request, see page 74

Female and male panel receptacle MC4

Contacts on carrier band (including insulating part)

PV-ADBP4-S2...
PV-ADSP4-S2...

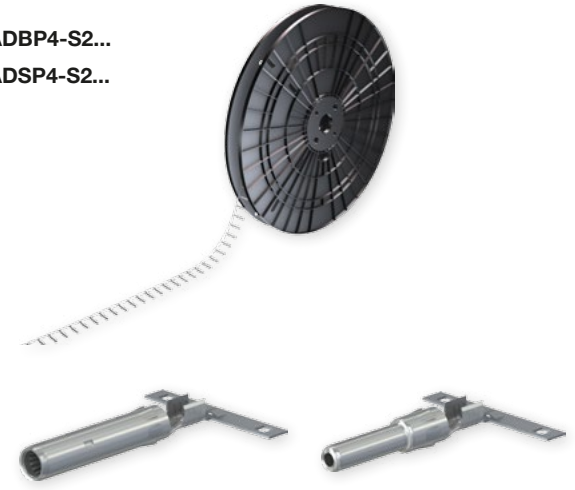

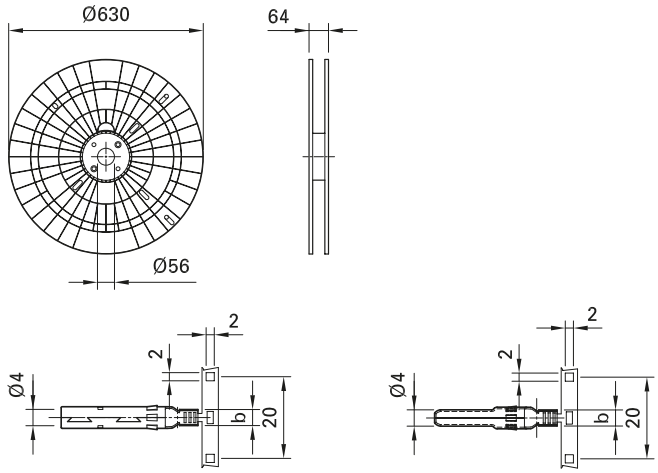

Order No.	Type	Female cable coupler	Male cable coupler	Conductor cross section			Crimping tool	Contacts per Reel[2)]	Approvals		
				mm²	AWG	b (mm)			TÜV		
32.0076P2000-UR	PV-ADBP4-S2/2.5-UR	×		1.5; 2.5	14	3	[1)]	2000	×	×	×
32.0077P2000-UR	PV-ADSP4-S2/2.5-UR		×	1.5; 2.5	14	3	[1)]	2000			
32.0078P2000-UR	PV-ADBP4-S2/6-UR	×		4; 6	12; 10	5	[1)]	2000			
32.0079P2000-UR	PV-ADSP4-S2/6-UR		×	4; 6	12; 10	5	[1)]	2000			
32.0150P1700	PV-ADBP4-S2/10	×		10		7.2	[1)]	1700	×		
32.0151P1700	PV-ADSP4-S2/10		×	10		7.2	[1)]	1700			

Note:
For more detailed information concerning the suitable cable gland range, please consult MA275.

Sealing caps page 62
Special socket wrench insert page 68
Unlocking tool page 69

Assembly Instructions MA275
www.staubli.com/electrical

- Feeder bands for fully automatic assembly
- Tools specially designed for MC4 available for automatic crimping
- Process reliability as result of specially developed supply reel

Technical data	
Connector system	Ø 4 mm
Rated voltage	1000 V DC / 1250 V DC (TÜV) 1000 V DC / 1500 V DC (UL)
Rated current TÜV (85 °C)	17 A (1.5 mm^2) 22.5 A (2.5 mm^2; 14 AWG) 39 A (4 mm^2; 12 AWG) 45 A (6 mm^2; 10 AWG) 51 A (10 mm^2)
Rated impulse voltage	12 kV (1000 V) / 16 kV (1250 V)
Ambient temperature range	-40 °C...+85 °C (TÜV) -40 °C...+75 °C (UL)
Upper limiting temperature	105 °C (TÜV)
Degree of protection, mated unmated	IP65; IP68 (1 m/1 h) IP2X
Overvoltage category / Pollution degree	CATIII / 3
Contact resistance of plug connectors	≤ 0.25 mΩ
Safety class	II
Contact system	MULTILAM
Type of termination	Crimping
Contact material	Copper, tin plated
Insulation material	PC / PA
Locking system (UL)	Locking type
Flame class	UL94-V0
TÜV-Rheinland certified, in accordance with IEC 62852 UL recognized component, in accordance with UL 6703 CSA certified, in accordance with UL 6703	R60110077 E356494 250725

[1] Information about a semi-automatic crimp device or assembly device on request

[2] Reel type subject to alterations

Female and male panel receptacle MC4-Evo2

Female and male panel receptacles as individual part (including insulating part)

PV-ADB4-EVO 2

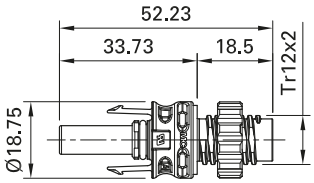

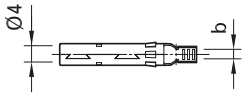

PV-ADS4-EVO 2

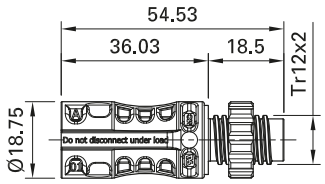

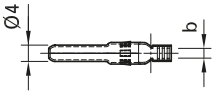

Order No.	Type	Female cable coupler	Male cable coupler	Conductor cross section			Approvals	
				mm²	AWG	b (mm)	TÜV	
32.0020P0001-UR	PV-ADB4-EVO 2/2,5-UR	×		2.5	14	3	×	×
32.0021P0001-UR	PV-ADS4-EVO 2/2,5-UR		×	2.5	14	3		
32.0022P0001-UR	PV-ADB4-EVO 2/6-UR	×		4.0; 6.0	12; 10	5		
32.0023P0001-UR	PV-ADS4-EVO 2/6-UR		×	4.0; 6.0	12; 10	5		

Note:

For more detailed information concerning the suitable cable gland range, please consult MA285.

Sealing caps page 62

Unlocking tool page 69

MA

Assembly Instructions MA285

www.staubli.com/electrical

- MC4-Evo2 panel-receptacle connectors are the interface between the inverter or the distributor housing and string
- Assembly directly via the threads or in the perforated plate with the plastic nut (contained in scope of delivery)
- Thanks to the D shape, the threaded connection is secured against turning
- For 1500 V DC (IEC), 1500 V DC (UL) approved unobstructed
- Degree of protection IP68 (1m/1h) guarantees highest connection safety
- Fast and clean connection
- Plug compatible with the original MC4 plug connector family
- With preassembled flat seal

Technical data	
Connector system	Ø 4 mm
Rated voltage	1500 V DC (TÜV) 1500 V DC (UL)
Rated current TÜV	32 A (2.5 mm^2 / 14 AWG) 42 A (4.0 mm^2 / 12 AWG) 47 A (6.0 mm^2 / 10 AWG)
Rated impulse voltage	8 kV (1500 V)
Ambient temperature range	-40 °C...+85 °C (TÜV) -40 °C...+90 °C (UL)
Upper limiting temperature	115 °C
Degree of protection, mated unmated	IP65; IP68 (1m/1h) IP2X
Overvoltage category / Pollution degree	CATIII / 3
Contact resistance of plug connectors	≤ 0,2 mΩ
Safety class	II
Contact system	MULTILAM
Type of termination	Crimping
Contact material	Copper, tin plated
Insulation material	PA
Locking system (UL)	Locking type
Flame class	UL94-V0
TÜV-Rheinland certified, in accordance with IEC 62852 UL recognized component, in accordance with UL 6703	R60118815 E343181

Female and male panel receptacle MC4-Evo2

Contacts on carrier band (including insulating part)

PV-ADB4-EVO 2
PV-ADS4-EVO 2

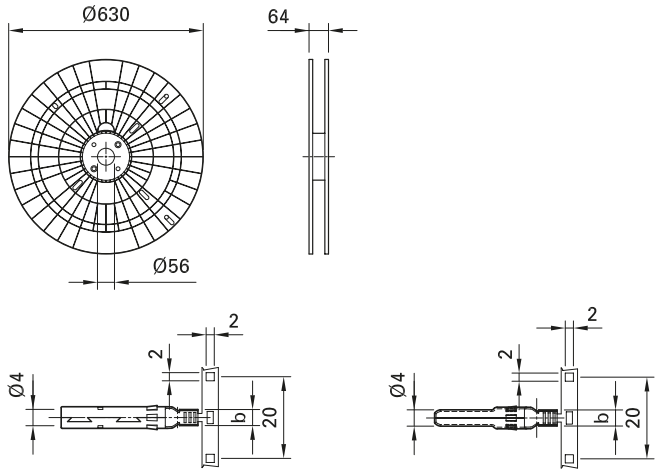

Order No.	Type	Female cable coupler	Male cable coupler	Conductor cross section			Crimping tool	Contacts per Reel[2]	Approvals	
				mm²	AWG	b (mm)			TÜV	
32.0020P2000-UR	PV-ADB4-EVO 2/2,5-UR	×		2.5	14	3	[1]	2000	×	×
32.0021P2000-UR	PV-ADS4-EVO 2/2,5-UR		×	2.5	14	3	[1]	2000		
32.0022P2000-UR	PV-ADB4-EVO 2/6-UR	×		4.0; 6.0	12; 10	5	[1]	2000		
32.0023P2000-UR	PV-ADS4-EVO 2/6-UR		×	4.0; 6.0	12; 10	5	[1]	2000		

Note:
For more detailed information concerning the suitable cable gland range, please consult MA285.

Sealing caps page 62
Unlocking tool page 69

Assembly Instructions MA285
www.staubli.com/electrical

- Feeder bands for fully automatic assembly
- Tools specially designed for MC4-Evo2 available for automatic crimping
- Process reliability as result of specially developed supply reel

Technical data	
Connector system	Ø 4 mm
Rated voltage	1500 V DC (TÜV) 1500 V DC (UL)
Rated current TÜV	32 A (2.5 mm^2 / 14 AWG) 42 A (4.0 mm^2 / 12 AWG) 47 A (6.0 mm^2 / 10 AWG)
Rated impulse voltage	8 kV (1500 V)
Ambient temperature range	-40 °C...+85 °C (TÜV) -40 °C...+90 °C (UL)
Upper limiting temperature	115 °C
Degree of protection, mated unmated	IP65; IP68 (1m/1h) IP2X
Overvoltage category / Pollution degree	CATIII / 3
Contact resistance of plug connectors	≤ 0,2 mΩ
Safety class	II
Contact system	MULTILAM
Type of termination	Crimping
Contact material	Copper, tin plated
Insulation material	PA
Locking system (UL)	Locking type
Flame class	UL94-V0
TÜV-Rheinland certified, in accordance with IEC 62852 UL recognized component, in accordance with UL 6703	R60118815 E343181

[1] Information about a semi-automatic crimp device or assembly device on request

[2] Reel type subject to alterations

Branch socket, branch plug MC3

PV-AZB3-UR

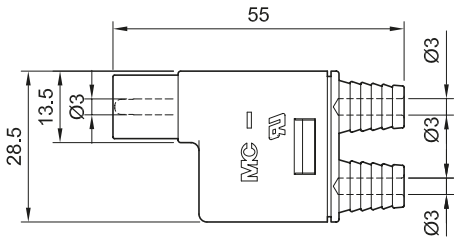

PV-AZS3-UR

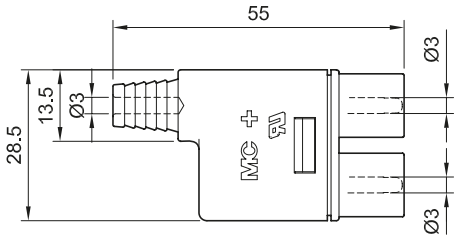

Order No.	Type	Description	Approvals
32.0008-UR	PV-AZB3-UR	Branch socket	
32.0009-UR	PV-AZS3-UR	Branch plug	

Sealing caps page 62

MA

Assembly Instructions MA249

www.staubli.com/electrical

- For a safe and simple parallel or serial-parallel connection of PV-modules.
- Pluggable with single-pole Stäubli PV-cable coupler MC3. Unmated connections must be protected by sealing caps.

Technical data	
Connector system	Ø 3 mm
Rated voltage	1000 V DC (Stäubli) 600 V DC (UL)
Rated current	30 A
Rated impulse voltage	8 kV
Ambient temperature range	-40 °C...+90 °C (Stäubli) -40 °C...+40 °C (UL)
Upper limiting temperature	105 °C (Stäubli)
Degree of protection, mated unmated	IP65 IP2X
Overvoltage category / Pollution degree	CATIII / 2
Contact resistance of plug connectors	≤ 0.5 mΩ
Safety class	II
Contact system	MULTILAM
Contact material	Copper, tin plated
Insulation material	PA
Locking system (UL)	Latching type
Insertion force / Withdrawal force	≤ 50 N / ≥ 50 N
Flame class	UL94-V0
UL recognized component, in accordance with UL 6703 CSA certified, in accordance with UL 6703	E343181 250725

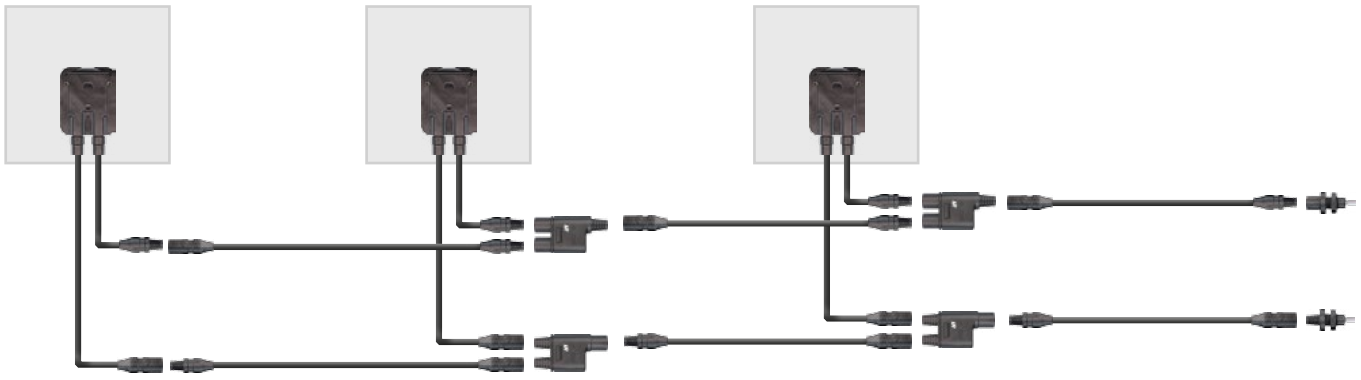

Branch socket, branch plug MC4

PV-AZB4

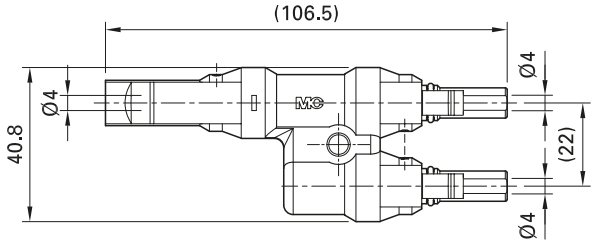

PV-AZS4

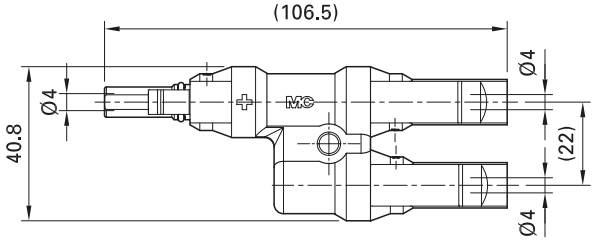

Order No.	Type	Description	Approvals
32.0018	PV-AZB4	Branch socket	
32.0019	PV-AZS4	Branch plug	

Sealing caps page 62

Unlocking tool page 69

MA

Assembly Instructions MA250

www.staubli.com/electrical

- For a safe and simple parallel or serial-parallel connection of PV-modules.
- Pluggable with single-pole Stäubli PV-cable coupler MC4. Unmated connections must be protected by sealing caps.

Technical data	
Connector system	Ø 4 mm
Rated voltage	1500 V DC (UL)
Rated current	50 A
Rated impulse voltage	12 kV
Ambient temperature range	-40 °C…+75 °C (UL)
Upper limiting temperature	105 °C (Stäubli)
Degree of protection, mated unmated	IP67 IP2X
Overvoltage category / Pollution degree	CATIII / 2
Contact resistance of plug connectors	≤ 0.5 mΩ
Safety class	II
Contact system	MULTILAM
Contact material	Copper, tin plated
Insulation material	PC
Locking system (UL)	Locking type
Flame class	UL94-V0
UL recognized component, in accordance with UL 6703	E343181

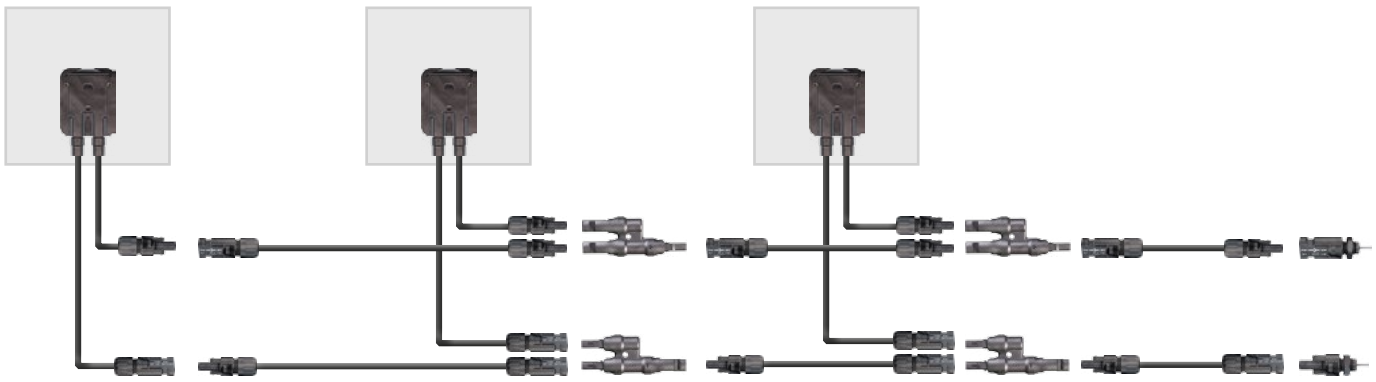

Advantages of the Stäubli junction boxes

Plug connector incorporates tried and tested MULTILAM technology with long-term stability

Protected

IEC 60068-2-52

Ammonia

Safety class II

Voltage level

TÜV 1000 V/1500 V
UL 600 V/1000 V

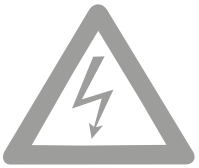

Suitable for customer-specific assembly

- Connector system
- Diode
- Cable length

3

Connection alternatives

- Welding
- Soldering
- Clamping

Compatibility

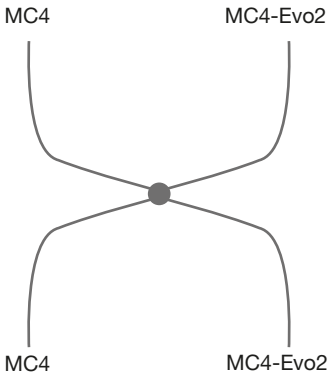

Certificates

These products are certified by TÜV Rheinland LGA Gmbh

UL recognized

GOST-R

CSA

Assembly

Suitable for automated assembly

Overview junction boxes

	Connector Ssytem	Approvals[1)]
For crystalline modules		
PV-JB/WL-H PV-JB/WL-V	MC3 MC4 MC4-Evo2	TÜV
PV-JB/MF... 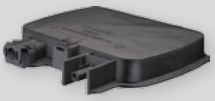	MC4	TÜV
For thin-film modules		
TwinBox PV-JB/TB-...	MC4	TÜV

Legend

Mounting with silicone

Mounting with potting compound

Suitable for customer-specific assembly

	Features	Salt mist spray test	Rated current	Rated voltage		Bus ribbons		Number of diodes	Degree of protection, mated	Ambient temperature range	Poles	Page
		Category	A	TÜV (V DC)	UL/CSA (V DC)	max.	Contacting			°C (IEC/UL)		
		V	10[2)] 12	1500	1000	4	Welding Soldering Clamping	3	IP65	-40...+85 -40...+40	2	42 44
		–	12 30[3)]	1000	1000	4	Welding Soldering	3	IP65 IP68	-40...+105 -40...+85	2	46
		–	25	1500	600	1	Welding	0	IP65 IP68	-40...+90 -40...+40	1	48

Suitable for automated assembly

[1)] Certifications are in some cases limited to specific types or still pending. Details are given on the relevant product pages

[2)] Available equipped with alternative bypass diode, on inquiry

[3)] Without bypass diode

PV junction box PV-JB/WL-H

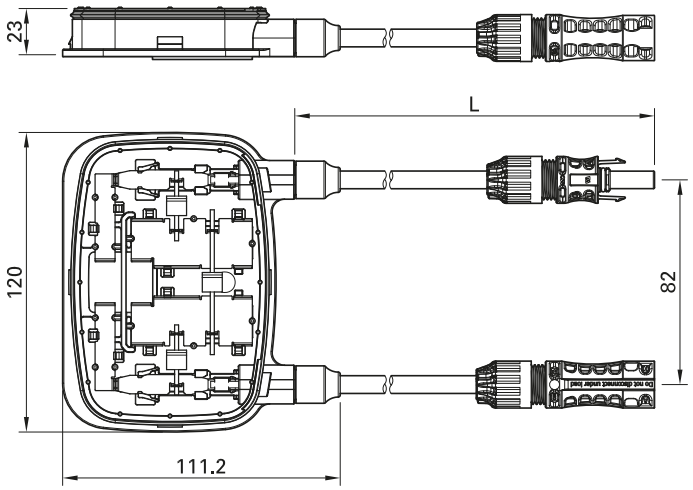

Order No.	Type	Connection of the bus ribbons		Cable cross section	Length of cable (L)	Cable type	Rated voltage		Approvals		
		WS[1]	C[1]	mm²	cm		V (TÜV)	V (UL)	TÜV		
32.7956-100	PV-JB/WL-H-02-F-WS	×		4	100	Flex-Sol-Evo-TX	1500	–	×		
32.7957-100	PV-JB/WL-H-02-F-C		×								
32.7895-100-UR	PV-JB/WL-H-02-D-WS	×		4	100	BETAflam®	1500	1000	×	×	×
32.7896-100-UR	PV-JB/WL-H-02-D-C		×								
32.7897-100-UR	PV-JB/WL-H-02-B-WS	×		4	100	Byson	1000	1000		×	×
32.7898-100-UR	PV-JB/WL-H-02-B-C		×								

Sealing caps page 62

Unlocking tool page 69

MA

Assembly Instructions MA269

www.staubli.com/electrical

- Junction box for electrical connection of horizontal ribbon conductors on crystalline modules.
- The low profile construction of the box allows it to be installed directly under the module frame. Ribbon termination is achieved by welding, soldering, or, optionally, by terminal clips.
- The box is fixed to the panel with silicone RTV. Additional protection given by the projecting cover, which prevents kinking of the cables at the point where they emerge from the cable gland.
- Custom versions on request (see page 76):
  – Individual lead lengths
- Connector types MC3 and MC4 upon request
- Includes PSA tape strips for fixturing during installation.

Technical data	
Connector system	MC4-Evo2 [3]
Rated current	12 A (Vishay VSB2045Y-M3)[3]
Rated voltage	1000 V DC / 1500 V DC (TÜV)[2] 600 V DC / 1000 V DC (UL)[2]
Rated surge voltage	12 kV (1000 V) 16 kV (1500 V)
Maximum permitted operating voltage	< 80 V
Ambient temperature range	-40 °C...+85 °C
Upper limiting temperature	+105 °C
Degree of protection, mated unmated	IP65 IP2X
Degree of pollution	3 (2 in the housing of the junction box)
Contact resistance of plug connectors	≤ 0.20 mΩ (MC4-Evo2) ≤ 0.25 mΩ (MC4) ≤ 0.5 mΩ (MC3)
Contact material	Copper, tin plated
Insulation material	PPE
Locking system plug connectors (UL)	Latching type (MC3) Locking type (MC4; MC4-Evo2)
Safety class	III
Flame class	UL94-V0
Ammonia resistance (acc. to DLG)	1500 h, 70 °C / 70% RH, 750 ppm
Salt mist spray test, degree of severity 5	IEC 60068-2-52
TÜV-Rheinland certified according EN50548:2011+A1+A2 TÜV-Rheinland certified according IEC 62790:2014	R60085113 R60114433
UL recognized component, in accordance with UL 3730	E335016
Intended for Module type	Crystalline
Poles	2
Diodes	3
Number of bus ribbons	4
Orientation of bus ribbons	Horizontal
Connection of the bus ribbons	Welding / Soldering / Clamping
Installation	Silicone
Suitable for semi-automated assembly	Yes

[1] WS Welding / Soldering
C Clamping
[2] Depending on cable type
[3] Other versions on request, see page 76

PV junction box PV-JB/WL-V

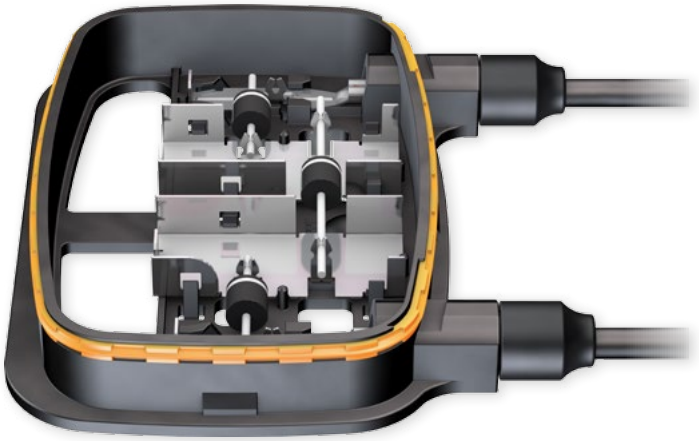

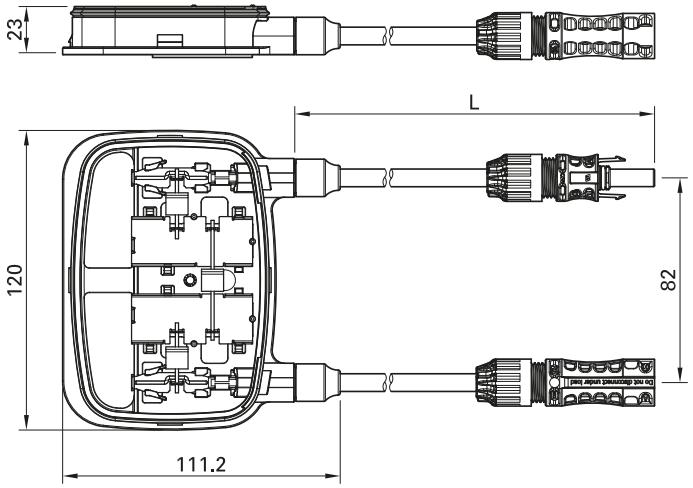

Order No.	Type	Connection of the bus ribbons		Cable cross section	Length of cable (L)	Cable type	Rated voltage		Approvals		
		WS[1]	C[1]	mm²	cm		V (TÜV)	V (UL)	TÜV	®[2]	
32.7954-100	PV-JB/WL-V-02-F-WS	×		4	100	Flex-Sol-Evo-TX	1500	–	×		
32.7955-100	PV-JB/WL-V-02-F-C		×								
32.7889-100-UR	PV-JB/WL-V-02-D-WS	×		4	100	BETAflam®	1500	1000	×	×	×
32.7890-100-UR	PV-JB/WL-V-02-D-C		×								
32.7891-100-UR	PV-JB/WL-V-02-B-WS	×		4	100	Byson	1000	1000		×	×
32.7892-100-UR	PV-JB/WL-V-02-B-C		×								

Sealing caps page 62

Unlocking tool page 69

MA

Assembly Instructions MA274

www.staubli.com/electrical

- Junction box for electrical connection of vertical ribbon conductors on crystalline modules.
- The low profile construction of the box allows it to be installed directly under the module frame. Ribbon termination is achieved by welding, soldering, or, optionally, by terminal clips.
- The box is fixed to the panel with silicone. Additional protection given by the projecting cover, which prevents kinking of the cables at the point where they emerge from the cable sleeve.
- Custom versions on request (see page 76):
  – Individual lead lengths
- Connector types MC3 and MC4 upon request
- Includes PSA tape strips for fixturing during installation.

Technical data	
Connector system	MC4-Evo2[3)]
Rated current	12 A (Vishay VSB2045Y-M3)[3)]
Rated voltage	1000 V DC / 1500 V DC (TÜV)[2)] 600 V DC / 1000 V DC (UL)[2)]
Rated surge voltage	12 kV (1000 V) 16 kV (1500 V)
Maximum permitted operating voltage	< 80 V
Ambient temperature range	-40 °C...+85 °C
Upper limiting temperature	+105 °C
Degree of protection, mated unmated	IP65 IP2X
Degree of pollution	3 (2 in the housing of the junction box)
Contact resistance of plug connectors	≤ 0.20 mΩ (MC4-Evo2) ≤ 0.25 mΩ (MC4) ≤ 0.5 mΩ (MC3)
Contact material	Copper, tin plated
Insulation material	PPE
Locking system plug connectors (UL)	Latching type (MC3) Locking type (MC4; MC4-Evo2)
Safety class	III
Flame class	UL94-V0
Ammonia resistance (acc. to DLG)	1500 h, 70 °C / 70% RH, 750 ppm
Salt mist spray test, degree of severity 5	IEC 60068-2-52
TÜV-Rheinland certified according EN50548:2011+A1+A2 TÜV-Rheinland certified according IEC 62790:2014	R60085113 R60114433
UL recognized component, in accordance with UL 3730	E335016
Intended for Module type	Crystalline
Poles	2
Diodes	3
Number of bus ribbons	4
Connection of bus ribbons	Vertical
Connection of the bus ribbons	Welding / Soldering / Clamping
Installation	Silicone
Suitable for semi-automated assembly	Yes

1) WS Welding / Soldering
C Clamping
2) Depending on cable type
3) Other versions on request, see page 76

PV junction box PV-JB/MF...

PV-JB/MF

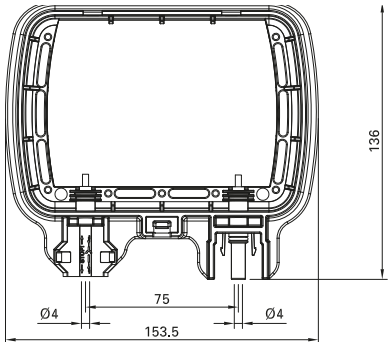

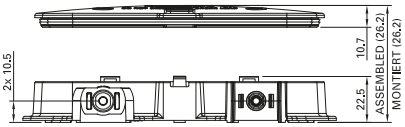

PV-JB/MF-U01

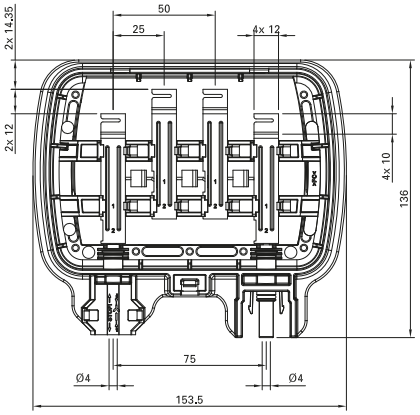

PV-JB/MF-U02

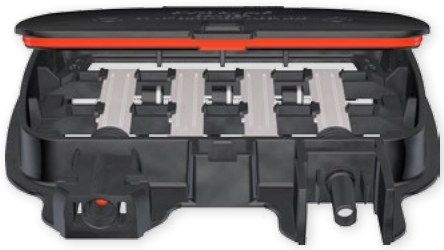

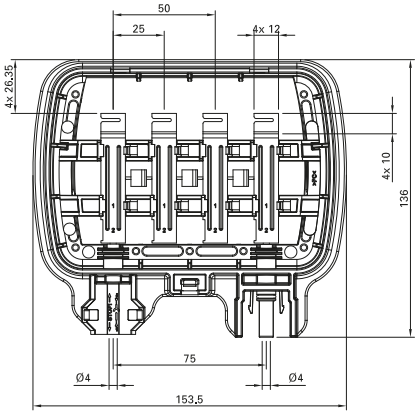

Order No.	Type	Rated current	Rated voltage	Bus Ribbons	Diode	Plug/Socket type
		A	V			
55000014	PV-JB/MF	30	1000	open	–	MC4
55000014-U01	PV-JB/MF-U01	12[1)]	45	horizontal	3 × Schottky	MC4
55000014-U02	PV-JB/MF-U02	12[1)]	45	vertical	3 × Schottky	MC4

MA

Assembly Instructions MA281

www.staubli.com/electrical

- Our new open format junction box with integrated MC4 connector allows for countless possible configurations to suit a wide range of applications.
- Junction box can be supplied as complete solution or be purchased as stand-alone enclosure for complete customer generated solutions.
- Base enclosure PV-JB/MF carries certification, allowing for minimal re-test requirements.
- Available with several tiers of Engineering and Manufacturing support.
- Time and cost saving via cable-free, automation-friendly design and greater packaging density.

Connector system	
Connector system	MC4
Rated current	30 A (PV-JB/MF) 12 A (PV-JB/MF-U01, PV-JB/MF-U02)
Rated voltage	1000 V DC (UL3730) 1000 V DC (pol/⏚) (EN50548)
Rated surge voltage	12 kV (1000 V)
Maximum permitted operating voltage	45 V
Ambient temperature range	-40 °C …+105 °C (TÜV) -40 °C …+85 °C (UL)
Upper limiting temperature	+105°C
Degree of protection, mated unmated	IP68 (1m/1h) IP2X
Degree of pollution	3
Contact resistance of plug connectors	≤ 0.25 mΩ
Contact material	Copper/Copper alloy, tin plated
Insulation material	PPE/PS
Locking system plug connectors	Locking type
Safety class	II
Flame class	UL94-5VA
TÜV-Rheinland certified according EN 50548	R60090054
UL recognized component, in acc. with UL 3730	E350378
CSA certified according UL3730	250725
Intended for Module type	Crystalline
Poles	2
Diodes	3
Number of bus ribbons	4
Connection of bus ribbons	Vertical or horizontal
Connection of the bus ribbons	Soldering
Installation	Silicone
Suitable for automated assembly	Yes

[1] Amperage based on Thermal Bypass Diode Test at 75 °C ambient temperature according to EN50548 and Temperature Rise Test according to UL3730

PV-Junction box TwinBox PV-JB/TB-...

PV-JB/TB-ST4

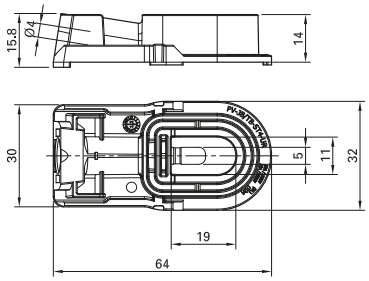

PV-JB/TB-BT4

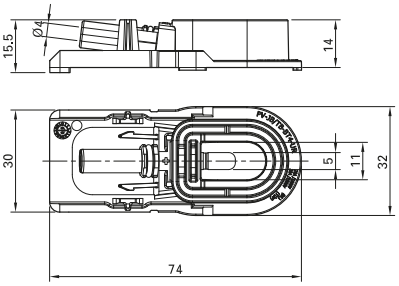

Order No.	Type	Description
32.7242-UR	PV-JB/TB-BT4-UR	Socket junction box, complete with cover and adhesive foil
32.7243-UR	PV-JB/TB-ST4-UR	Plug junction box, complete with cover and adhesive foil

Sealing caps page 62

Unlocking tool page 69

MA

Assembly Instructions MA263

www.staubli.com/electrical

- Specially developed for thin-film PV modules.
- Designed for fully automated assembly
- High dependability due to perfect matching of components, potting compound, silicone and adhesive foil.
- Compartment for electrical connection between box and panel hermetically sealed with potting compound.
- Compact design due to integration of the MC4 connection technology directly into the junction box.

Pre-assembled PV cables:
The connection of the TwinBox is achieved by using the MC4 connector system. Depending on the choice of cables and connectors various voltage systems may be realized: IEC 1000 V – 1500 V as well as UL 600 V – 1000 V.

Technical data	
Connector system	MC4
Rated current	25 A
Rated voltage[1)]	MC4: 1000 V DC / 1500 V DC[2)] (TÜV) 600 V DC (UL)
Rated surge voltage	16 kV
Maximum permitted operating voltage	1500 V
Upper limiting temperature	105 °C (TÜV)
Ambient temperature range	-40 °C…+90 °C (TÜV) -40 °C…+80 °C (UL)
Upper limiting temperature	+105 °C
Degree of protection, mated unmated	IP65/IP68 (1 h/1 m) IP2X
Degree of pollution	3 mated
Contact resistance of plug connectors	≤0.25 mΩ
Contact material	Copper alloy, tin plated
Insulation material	PA
Locking system plug connectors	Locking type
Safety class	III
Flame class	UL94-V0
TÜV-Rheinland certified according EN 50548 UL recognized component, in acc. with UL 3730	R60091405 E335016
Intended for Module type	Thin film
Poles	1
Diodes	0
Number of bus ribbons	1
Connection of bus ribbons	Vertical or horizontal
Connection of the bus ribbons	Welding (UL, TÜV)/Soldering (TÜV)
Installation	Silicone and potting compound
Suitable for automated assembly	Yes

1) The rated voltage of the components and connectors used must be checked in the certificates.
2) 1500 V DC (IEC) according 2PFG2330: only for restricted access locations

PV Cable Flex-Sol-Evo-DX...

Order No.	Type	Conductor cross section		Conductor Ø	Outer-Ø	Strand design	Conductor resistance	Approvals
		mm^2		mm	mm	Number x Ø mm	Ω/km 20 °C	
62.7434-91021	FLEX-SOL-EVO-DX 2,5	2.5	14	2.0	5.94	47 × Ø 0.25	8.21	TÜV
62.7435-91021	FLEX-SOL-EVO-DX 4,0	4.0	12	2.4	6.35	52 × Ø 0.30	5.09	
62.7436-91021	FLEX-SOL-EVO-DX 6,0	6.0	10	3.0	6.97	78 × Ø 0.30	3.39	
62.7437-91021	FLEX-SOL-EVO-DX 10	10	8	4.1	8.57	77 × Ø 0.40	1.95	

Halogen free cross-linked polyolefin double layers photovoltaic cables for use at the photovoltaic power systems.
This cable can match with most PV-components like PV-junction boxes and PV-connectors, which have a rated voltage of 1500 V DC.

Technical data	
Nominal voltage	2000 V (UL) 1500 V / max. 1800 V (U0) (IEC)
Test voltage according to EN 50395-6	7.5 kV AC / 15 kV DC (5 min.)
Rated current	41 A (2.5 mm^2 / 14 AWG). 55 A (4.0 mm^2 / 14 AWG). 70 A (6.0 mm^2 / 14 AWG). 98 A (10 mm^2 / 14 AWG)
Rated voltage	1500 V DC (IEC) / 2000 V DC (UL) PV-Wire
Insulation resistance of the complete cable according to EN 50395-8.2	≥ 1000 MΩkm
Ambient temperature	-40 °C ...+90 °C
Maximum conductor temperature	max. +120 °C
Bending radius Dynamic Static	>5 × OD >4 × OD
Resistant to...	UV Ozone Hydrolysis
Resistance to... tested acc. to IEC 60811-2-1	Acids, alcalis and oil (IRM 902)
Isolation, acc. IEC 60332-1-2	Flame retardant with particularly low smoke emission
Conductor: fine-wire tinned copper strands Number larger than standard	Class 5 in accordance to IEC/EN 60228
Inner insulation (white) Sheath insulation, with colour patch (black)	XLPO (RAL9003) Polyolefin
Sheat color	Black
DEKRA certified UL recognized component	R50359551 UL E 470857

PV Cable Flex-Sol-Evo-TX...

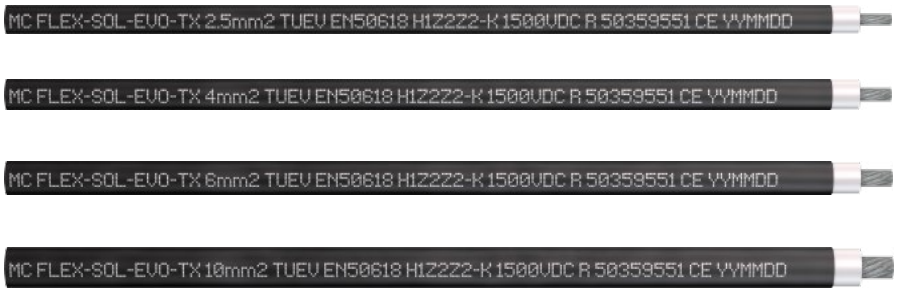

Order No.	Type	Conductor cross section	Conductor Ø	Outer-Ø	Strand design	Conductor resistance	Approvals
		mm^2	mm	mm	Number x Ø mm	Ω/km 20 °C	
62.7430-91021	FLEX-SOL-EVO-TX 2,5	2.5	2.0	5.0	47 × Ø 0.25	8.21	TÜV
62.7431-91021	FLEX-SOL-EVO-TX 4,0	4.0	2.4	5.4	52 × Ø 0.30	5.09	
62.7432-91021	FLEX-SOL-EVO-TX 6,0	6.0	3.0	6.0	78 × Ø 0.30	3.39	
62.7433-91021	FLEX-SOL-EVO-TX 10	10	4.1	7.2	77 × Ø 0.40	1.95	

Halogen free cross-linked polyolefin double layers photovoltaic cables for use at the photovoltaic power systems.

Technical data	
Nominal voltage	1500 V/max. 1800V (U0) (IEC)
Test voltage according to EN 50395-6	6.5 kV AC/15 kV DC (5 min.)
Rated current	41 A (2.5 mm^2). 55 A (4.0 mm^2). 70 A (6.0 mm^2). 98 A (10 mm^2)
Rated voltage	1500 V DC IEC
Insulation resistance of the complete cable according to EN 50395-8.2	≥ 1000 MΩkm
Ambient temperature	-40 °C ...+90 °C
Maximum conductor temperature	max. +120 °C
Bending radius Dynamic Static	>5 × OD >4 × OD
Resistant to...	UV Ozone Hydrolysis
Resistance to... tested acc. to IEC 60811-2-1	Acids, alcalis and oil (IRM 902)
Isolation, acc. IEC 60332-1-2	Flame retardant with particularly low smoke emission
Conductor: fine-wire tinned copper strands Number larger than standard	Wire class 5 in accordance to IEC/EN 60228
Inner insulation (white) Sheath insulation, with colour patch (black)	XLPE (RAL9003) Polyolefin
Sheat color	Black
TÜV Approval according EN50618	R50359551

In-line-Fuse PV-K/ILF

PV-K/ILF...UL

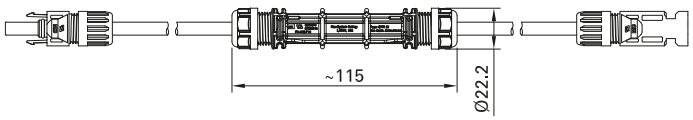

Order No.	Type	Safety	Type of connector/socket	Length	Approvals
		A/V	mm	cm	
55000140-0050UL	PV-K/ILF4/6N0050UL	4/1000	MC4	50	UL
55000127-0050UL	PV-K/ILF10/6N0050UL	10/1000			
55000128-0050UL	PV-K/ILF15/6N0050UL	15/1000			
55000129-0050UL	PV-K/ILF20/6N0050UL	20/1000			
55000130-0050UL	PV-K/ILF30/6N0050UL	30/1000			
55000189-0055UL	PV-K/1500ILF4/6N0055UL	4/1500	MC4	55	
55000190-0055UL	PV-K/1500ILF10/6N0055UL	10/1500			
55000191-0055UL	PV-K/1500ILF15/6N0055UL	15/1500			
55000192-0055UL	PV-K/1500ILF20/6N0055UL	20/1500			

The in-line fuse PV-K/ILF with a crimping connection guarantees a long-lasting, stable connection in comparison to conventional clip-in clamps:

- Minimal energy loss, low heat generation
- Robust housing, safety class IP68
- Cable cross section 10 AWG/6 mm²
- Cable cTÜVus certified
- Two standard lengths:
- 50 cm (1000 V) and 55 cm (1500 V)
- Other lengths upon request

Technical data	
Connector system	MC4
Rated current fuse	1000 V: 4 A, 10 A, 15 A, 20 A, 30 A 1500 V: 4A , 10 A, 15 A, 20 A (pending)
Rated voltage fuse	1000 V (50 cm) 1500 V (55 cm)
Insulation test voltage	6600 V
Ambient temperature	-40 °C...+50 °C (UL9703)
Upper limiting temperature	105 °C
Contact resistance of plug connectors	≤0,25 mΩ
Contact material	Copper alloy, tin-plated
Insulation material	PC/PA/PA + GF
Flame class	UL94-V0
UL-recognized components in accordance with UL 9703	E474445

Branch Cable Leads PV-K/BC...

Type	Description	Order form, see page
PV-K/BC...	Branch cable, according to customer's specification	72

Advantages of branch cable leads

- Fast and efficient module wiring, reduced assembly time
- Fabrication according to customer specification
- Continuous main cable reducing the number of contact points, thereby reducing contact resistance
- Pre-assembled and 100% inspected by Stäubli
- Can be assembled based on customer requirements, see order form page 72

Technical data	
Connector system [1]	MC3/MC4 [2]
Rated voltage	1000 V DC (Stäubli)
Rated current	30 A
Rated impulse voltage	12 kV
Maximum permitted operating voltage	<50 V
Ambient temperature range	-40 °C...+90 °C (Stäubli)
Upper limiting temperature	105 °C (Stäubli)
Degree of protection, mated unmated	IP67 IP2X
Contact resistance of plug connectors	≤0,25 mΩ (MC4) ≤0,5 mΩ (MC3)
Safety class	II
Contact system	MULTILAM
Type of termination	Crimping
Contact material	Copper, tin plated
Locking system (UL)	Latching type (MC3) Locking type (MC4)
Cable type	FLEX-SOL-XL
Degree of pollution	3

[1] For technical data please refer to the appropriate installation instructions
MC3: MA207; MC4: MA231

[2] On request

150 GW successfully connected

ACCESSORIES

Adapter leads

Adapter test lead MC3 and MC4

One end equipped with Stäubli PV connector, the other end with Ø 4 mm Stäubli safety plug for measuring instruments with Ø 4 mm safety sockets ensuring safe current and voltage measuring on PV-modules and systems.

PV-AMLB3/150

PV-AMLB4/150

PV-AMLS3/150

PV-AMLS4/150

Order No.	Type	PV-plug	PV-socket	System	Colours
32.1098-150*	PV-AMLB3/150		×	MC3	21 23 29
32.1099-150*	PV-AMLS3/150	×		MC3	21 22
32.1198-150*	PV-AMLB4/150		×	MC4	21 23 29
32.1199-150*	PV-AMLS4/150	×		MC4	21 22

Technical data	
Connector system	MC3, MC4
Rated voltage	1000 V DC
Rated current	19 A
Conductor cross section	1 mm²
Cable length	150 cm
Cable insulation	PVC
Overvoltage category / Pollution degree	CATIII / 2

* Add the desired colour code

Sealing caps page 62

Adapter lead MC3/MC4

To interconnect the two Stäubli PV-Plug connector systems MC3 and MC4.

PV-A-KBT4/KST3

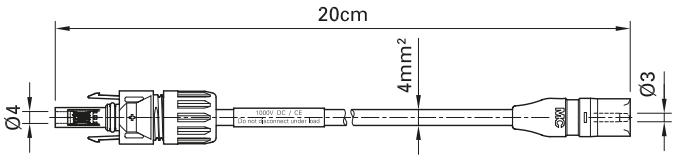

PV-A-KBT3/KST4

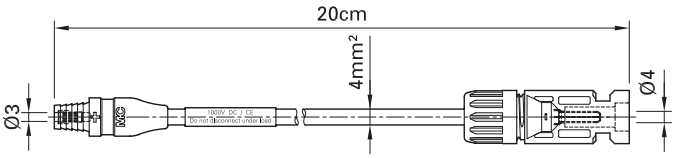

Order No.	Type
32.6096	PV-A-KBT4/KST3
32.6097	PV-A-KBT3/KST4

Technical data	
Connector system	MC3/MC4
Rated voltage	1000 V DC
Rated current	20 A
Degree of protection, mated unmated	IP67 IP2X
Ambient temperature range	-40 °C...+90 °C
Upper limiting temperature	105 °C
Overvoltage category/Pollution degree	CATIII/2
Further technical data, see pages	12, 14

Sealing caps page 62

Test socket and plug MC3 und MC4

Special construction with gold plated contacts for test and measurement to achieve higher mating cycles.
Without locking system.

PV-KBT3-P AU

PV-KBT4II-P AU

PV-KST3-P AU

PV-KST4II-P AU

Order No.	Type	Socket		Plug		Suitable for	MA Assembly instruction
		MC3	MC4	MC3	MC4		
32.0042	PV-KBT3-P AU	×				PV-KST3..., PV-ADSP3..., PV-AZS3, PV-AZB3	MA259
32.0043	PV-KST3-P AU			×		PV-KBT3..., PV-ADBP3..., PV-AZS3, PV-AZB3	MA259
32.0044	PV-KBT4II-P AU		×			PV-KST4..., PV-ADSP4-S2..., PV-AZS4, PV-AZB4	MA260
32.0045	PV-KST4II-P AU				×	PV-KBT4..., PV-ADBP4-S2..., PV-AZS4, PV-AZB4	MA260

Technical data	
Connector system	MC3, MC4
Rated voltage	1000 V DC
Rated current	20 A (MC3) (10 AWG / 4 mm²) 30 A (MC4) (10 AWG / 4 mm²)
Test voltage	6 kV (50 Hz, 1 min.)
Conductor cross section	2.5 mm²; 4 mm²; (14 AWG; 12 AWG; 10 AWG)
Degree of protection, unmated	IP2X
Overvoltage category / Pollution degree	CATIII / 2
Contact resistance of plug connectors	≤ 0.25 mΩ (MC4) ≤ 0.50 mΩ (MC3)
Contact material	Copper, gold plated
Insulation material	TPE / PA (MC3) PC / PA (MC4)

Test plugs

Test plug MC4

This test plug is used to control the correct location of the MC4 contact in the insulation.

PV-PST

Order No.	Type	MA Assembly instruction
32.6028	PV-PST	MA231

Test plug MC4-Evo2

This test plug is used to control the correct location of the MC4-Evo2 contact in the insulation.

PV-EVO-PST

Order No.	Type	MA Assembly instruction
32.6073	PV-EVO-PST	MA273

Sealing caps

Sealing caps MC3, MC4, MC4-Evo2 and MC4-EvoAC

PV-BVK3

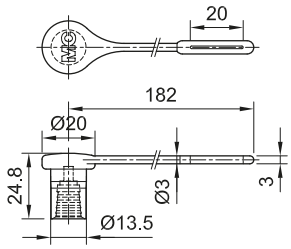

PV-SVK3

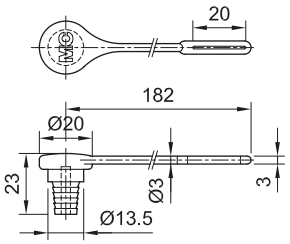

PV-BVK3-OL

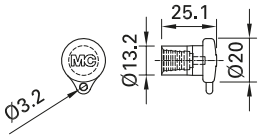

PV-SVK3-OL

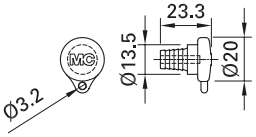

PV-BVK4

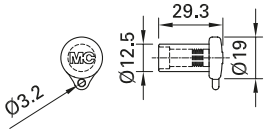

PV-SVK4

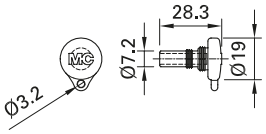

PV-BVK-EVO AC

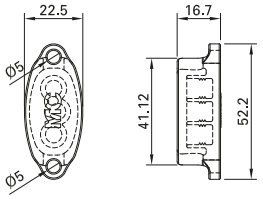

PV-SVK-EVO AC

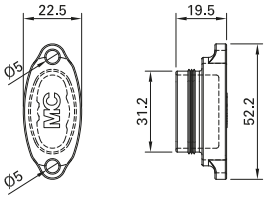

MA

Assembly Instructions MA258

www.staubli.com/electrical

Sealing caps for tight sealing of unplugged PV connectors.To prevent loss, simply push the strap loop over the cable connector.

Order No	Type	With cord	Suitable for plug side	Suitable for socket side	System
32.0710	PV-BVK3	x		×	MC3
32.0711	PV-SVK3	x	×		MC3
32.0720	PV-BVK3-OL			×	MC3
32.0721	PV-SVK3-OL		×		MC3
32.0716	PV-BVK4			×	MC4, MC4-Evo2
32.0717	PV-SVK4		×		MC4, MC4-Evo2
32.0748	PV-BVK-EVO AC			×	MC4-EvoAC
32.0749	PV-SVK-EVO AC		×		MC4-EvoAC

Technical data	
Material	TPE
Degree of protection, mated	IP67

TOOLS

Assembly tools

MC3 Assembly device PV-AWZ3

For assembly of cable couplers PV-KBT3... and PV-KST3..., for conductor cross sections from 2.5 mm² to 10 mm².
This feature combined with the keyring to secure the tool makes this ideal for use in assembly on rooftops. The included tapered spindles will be delivered fixed in a removable magazine.

PV-AWZ3

Pos.	Order No.	Type	Designation
	32.6060	PV-AWZ3	Assembly device, incl. pos. 1–5
Individual parts			
1	**32.6061**	PV-KO 2,5-4	Spindle 2.5; 4 mm², up to outer-Ø 6.6 mm
2	**32.6062**	PV-KO 6	Spindle 6 mm², up to outer-Ø 7.6 mm
3	**32.6063**	PV-KO 10	Spindle 10 mm², up to outer-Ø 8.4 mm
4	**32.6064**	PV-AWZ3-ML	Magazine empty, removable
5	**32.6065**	PV-AWZ3-KK	Cable grip

MA

Assembly Instructions MA268

www.staubli.com/electrical

Stripping pliers PV-AZM-...

With length stop for conductor cross sections 1.5 mm², 2.5 mm², 4 mm², 6 mm² and 10 mm². Specially adapted for the Flex-Sol-Evo... PV cable, for stripping small cable quantities on the roof.

PV-AZM-...

Order No.	Type	Designation	for cable cross sections	MA Assembly instruction
			mm²	
32.6027-156	PV-AZM-156	Pliers with Insert	1.5; 2.5; 4; 6	MA207, MA223, MA259, MA260
32.6027-410	PV-AZM-410	Pliers with Insert	4; 6; 10	MA231, MA268

Individual parts

PV-M-AZM-156

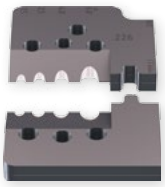

PV-M-AZM-410

32.6057-156	PV-M-AZM-156	Insert	1.5; 2.5; 4; 6	MA207, MA223, MA259, MA260
32.6057-410	PV-M-AZM-410	Insert	4; 6; 10	MA231, MA268

Crimping pliers for industrial use PV-CZ...

Only the tools stated below may be used for the assembly of UL- and TÜV-approved products.

These are suited for the processing of high numbers of pieces and can be adjusted to the product to be processed with the help of changeable locators and crimp inserts.

PV-CZ

PV-CZM...

Order No.	Type	Designation	Crimp range		suitable for			MA Assembly instruction
			mm^2	AWG	MC3	MC4	MC4-Evo2	
32.6008	PV-CZ	[1]	2.5; 4	14; 12	×			MA207, MA223
32.6020-16100A	PV-CZM-16100A	[2]	2.5; 4; 6	14; 12; 10	×			MA251
32.6020-17100	PV-CZM-17100	[2]	4; 10	–	×			MA207, MA223, MA251, MA268
32.6020-18100	PV-CZM-18100	[2]	1.5; 2.5; 4	14; 12		×		MA251
32.6020-19100	PV-CZM-19100	[2]	2.5; 4; 6	14; 12; 10		×		MA251
32.6020-20100	PV-CZM-20100	[2]	4; 10	–		×		MA251
32.6020-21100	PV-CZM-21100	[2]	6; 10	–		×		MA251
32.6020-22100	PV-CZM-22100	[2]	–	12; 10; 8		×		MA251
32.6020-40100	PV-CZM-40100	[2]	1.5; 2.5; 4	16; 14; 12			×	MA251
32.6020-41100	PV-CZM-41100	[2]	2.5; 4; 6	14; 12; 10			×	MA251
32.6020-42100	PV-CZM-42100	[2]	4; 10	12; 8			×	MA251

Individual parts, only for PV-CZM...

PV-ES-CZM-16100

PV-ES-CZM-17100

PV-ES-CZM-18100

PV-ES-CZM-19100

PV-ES-CZM-20100

PV-ES-CZM-21100

PV-LOC-A

PV-LOC-A10

PV-LOC

32.6021-16100	PV-ES-CZM-16100	Insert	2.5; 4; 6	14; 12; 10	×			MA251
32.6021-17100	PV-ES-CZM-17100	Insert	4; 10	–	×			MA207, MA223, MA251, MA268
32.6039	PV-LOC-A	Locator	2.5; 4; 6	–	×			MA251
32.6049	PV-LOC-A10	Locator	4; 10	–	×			MA207, MA223, MA251, MA268
32.6021-18100	PV-ES-CZM-18100	Insert	1.5; 2.5; 4	14; 12		×		MA251
32.6021-19100	PV-ES-CZM-19100	Insert	2.5; 4; 6	14; 12; 10		×		MA251
32.6021-20100	PV-ES-CZM-20100	Insert	4; 10	–		×		MA251
32.6021-21100	PV-ES-CZM-21100	Insert	6; 10	–		×		MA251
32.6021-22100	PV-ES-CZM-22100	Insert	–	12; 10; 8		×		MA251
32.6021-40100	PV-ES-CZM-40100	Insert	1.5; 2.5; 4	16; 14; 12			×	MA251
32.6021-41100	PV-ES-CZM-41100	Insert	2.5; 4; 6	14; 12; 10			×	MA251
32.6021-42100	PV-ES-CZM-42100	Insert	4; 10	12; 8			×	MA251
32.6040	PV-LOC	Locator	universal			×		MA251
32.6055	PV-LOC-B	Locator	–	12; 10; 8		×		MA251
32.6056	PV-LOC-C	Locator	universal				×	MA251

[1] For flexible cable only (class 5 and 6)
[2] Crimping pliers incl. locator and insert

Crimping pliers for private use PV-CZM-BS

Suitable for the assembly of products approved by TÜV in small amounts.

Complete tool for the assembly of the original MC4.

PV-CZM-BS

Order No.	Type	Crimp range		suitable for			MA Assembly instruction
		mm^2	AWG	MC3	MC4	MC4-Evo2	
32.6025	PV-CZM-BS	2.5; 4; 6	–		×		MA289

Socket wrench insert

Stäubli recommends these socket wrench inserts for a simple and safe assembly of the panel receptacles.

PV-WZ-AD/GWD

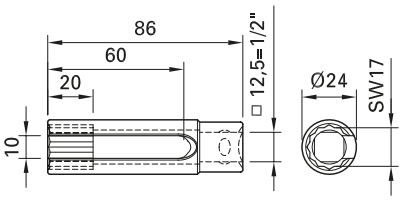

PV-SSE-AD4

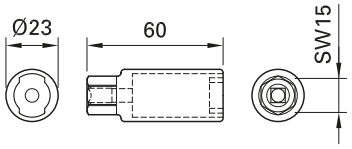

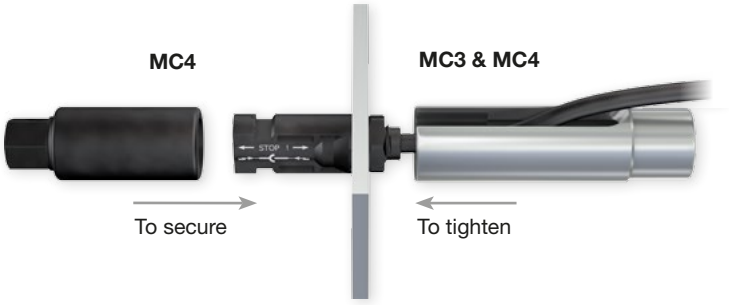

Order No.	Type	suitable for panel receptacles	MA Assembly instruction
32.6006	PV-WZ-AD/GWD	MC3, MC4	MA223
32.6026	PV-SSE-AD4	MC4	

Open-end spanner and unlocking tool MC4, MC4-Evo2 and MC4-EvoAC

To tighten and unscrew the cable gland and
to open the locking device of the connection.

PV-MS

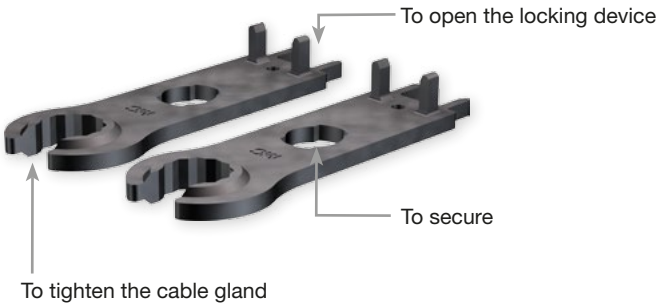

PV-MS-PLS

PV-MS-PLS/G

PV-MS-EVO AC

Order No.	Type	Description	suitable for	MA Assembly instruction
32.6024	PV-MS	Open-end spanner set (consisting of 2 open-end spanners), plastics	MC4	MA231, MA260
32.6058	PV-MS-PLS	Unlocking tool, incl. belt pouch (consisting of 2 open-end spanners), metal	MC4 MC4-Evo2	MA270
9410888400	PV-MS-PLS/G	Installation wrench	MC4 MC4-Evo2	
32.6075	PV-MS-EVO AC	Unlocking tool	MC4-EvoAC	MA284

MC4 Tool case PV-WZ4-SET

Plastic case with tools for assembly of PV connectors.

PV-WZ4-SET

Pos.	Order No.	Type	Designation	Width	Height	Depth
	32.6019	PV-WZ4-SET	Case, incl. Pos. 1 – 3	345 mm	90 mm	275 mm
Einzelteile						
1	**32.6020-19100**	PV-CZM-19100	Crimping pliers 2.5 mm^2; 4 mm^2; 6 mm^2 / 14 AWG; 12 AWG; 10 AWG			
2	**32.6024**	PV-MS	Open-end spanner set			
3	**–**	–	Plastic box			
Optional						
	32.6006	PV-WZ-AD/GWD	Socket wrench insert			
	32.6026	PV-SSE-AD4	Socket wrench insert			
	32.6021-...	PV-ES-CZM-...	Insert, see page 66			
	...	PV-LOC...	Locator, see page 66			
	32.6027-156	PV-AZM-156	Stripping pliers			
	32.6027-410	PV-AZM-410	Stripping pliers			

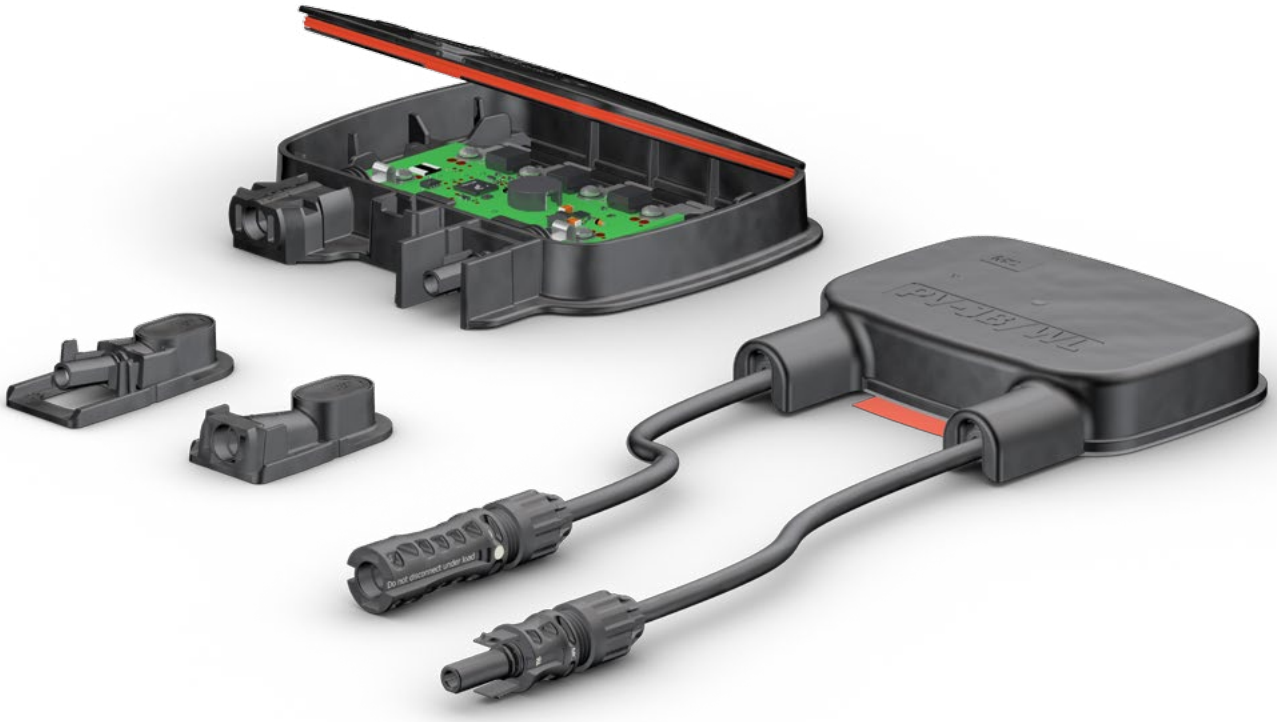

Multiple solutions – one supplier

FORMS

Branch cable PV-K/BC...

According to customer request

Quantity ☐ Order ☐ Quotation ☐ Reference

2 Overall length ☐ m (min. 0.56 m, max. 100 m)

4a Beginning of main lead
☐ cm (min. 25 cm, max. 1000 cm)
(MC4: min. 28 cm, max. 1000 cm)

4b Length of intermediate sections (min. 25 cm)[1)]
1 ☐ 2 ☐ 3 ☐ 4 ☐ 5 ☐
11 ☐ 12 ☐ 13 ☐ 14 ☐ 15 ☐

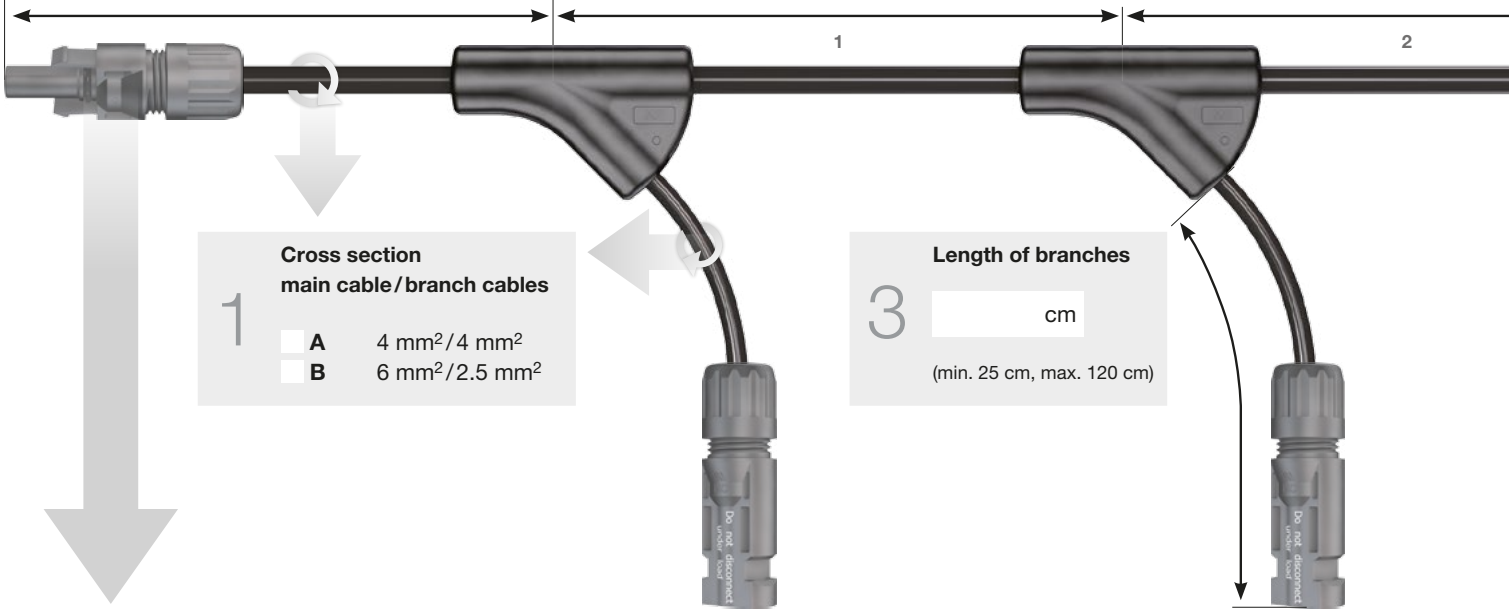

1 Cross section main cable / branch cables
☐ **A** 4 mm²/4 mm²
☐ **B** 6 mm²/2.5 mm²

3 Length of branches
☐ cm
(min. 25 cm, max. 120 cm)

6 Beginning of main lead

☐ **S3** PV-KST3
☐ **B3** PV-KBT3
☐ **S4** PV-KST4
☐ **B4** PV-KBT4
☐ **00** Not stripped (straight cut)
☐ **mm** Indicate length to be stripped
☐ **X** Customer-specific fabrication

5 Number of branches
☐ (max. 20)

9 Sealing caps (for all plug connectors)
☐ **Y** with
☐ **N** without

www

Interactive Form: www.staubli.com/electrical
> Downloads > Online-Forms

To determine your article designation, please fill in boxes 1 – 9.

After sending in this order form you will receive an approval sketch for your definitive order.

PV – K/BC – [1] **–** [2] **/** [3] **–** [4] X **–** [5] **–** [6] **/** [7] **/** [8] **–** [9]

cm **Grid length (all sections of equal length)**

6	7	8	9	10
16	17	18	19	20

4c **End of main lead**

cm (min. 25 cm, max. 1000 cm)

(MC4: min. 28 cm, max. 1000 cm)

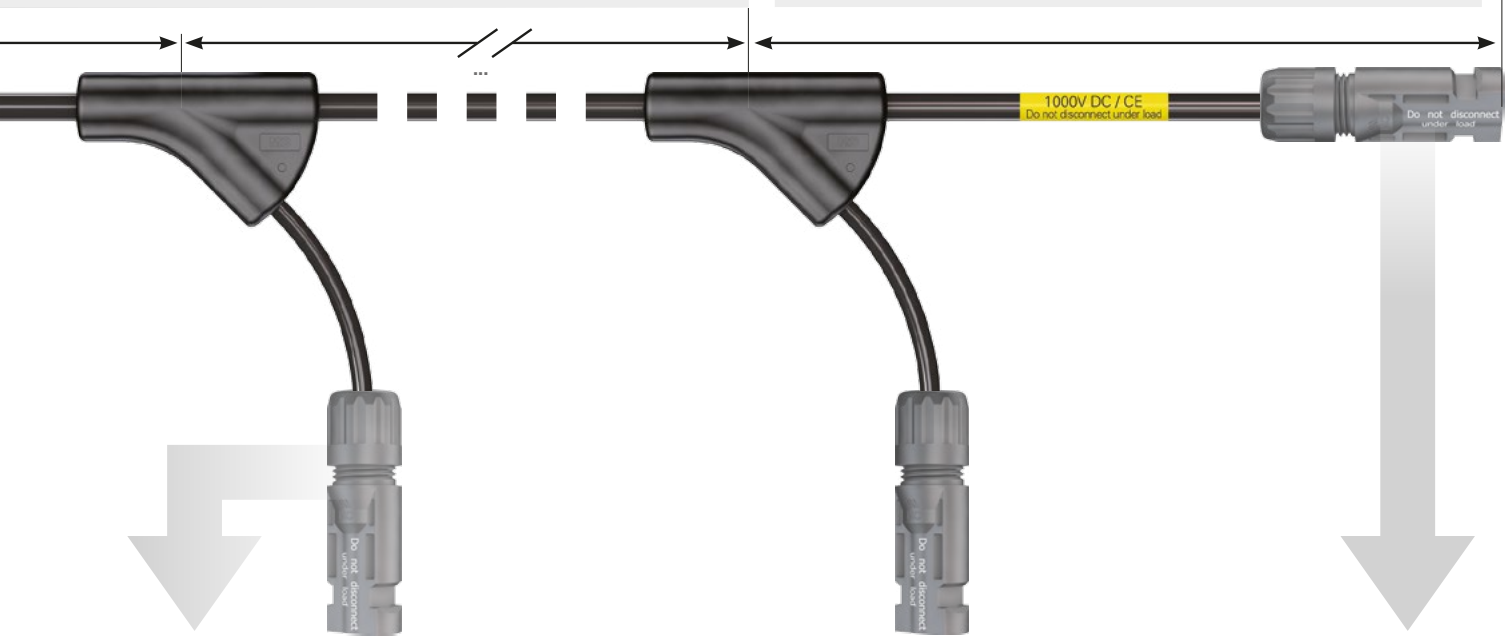

7 **Termination of branches**

- **S3** PV-KST3
- **B3** PV-KBT3
- **S4** PV-KST4
- **B4** PV-KBT4
- **00** Not stripped (straight cut)
- **mm** Indicate length to be stripped
- **X** Customer-specific fabrication

8 **End of main lead**

- PV-KST3 **S3**
- PV-KBT3 **B3**
- PV-KST4 **S4**
- PV-KBT4 **B4**
- Not stripped (straight cut) **00**
- Indicate length to be stripped **mm**
- Customer-specific fabrication **X**

[1] For more than 30 sections with individual lengths, please fill in an additional table.

Cable assemblies

According to customer request

Quantity ☐ Order ☐ Quotation Reference

Side 1

MC3

☐ PV-KBT3

☐ PV-KST3

☐ PV-ADBP3

☐ PV-ADSP3

MC4

☐ PV-KBT4

☐ PV-KST4

☐ PV-ADBP4-S2

☐ PV-ADSP4-S2

MC4-Evo2

☐ PV-KBT4-EVO 2

☐ PV-KST4-EVO 2

☐ PV-ADB4-EVO 2

☐ PV-ADS4-EVO 2

☐ **Cable lug**

☐ Ø

☐ Ø

Isolation: ☐ without ☐ with

☐ **Partial stripping** 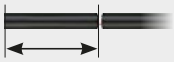

Length ☐ (max. 45 mm)

☐ **Not stripped**

☐ **Other**

Cable

Cable cross section (mm²):

☐ 2.5 ☐ 4 ☐ 6 ☐ 10

Length of cable[1]:

☐ cm

Sender

Company

Name

Department

Address

Tel.

Fax

E-Mail

Date

Signature

Other

Side 2

MC3

PV-KBT3 ☐

PV-KST3 ☐

PV-ADBP3 ☐

PV-ADSP3 ☐

MC4

PV-KBT4 ☐

PV-KST4 ☐

PV-ADBP4-S2 ☐

PV-ADSP4-S2 ☐

MC4-Evo2

PV-KBT4-EVO 2 ☐

PV-KST4-EVO 2 ☐

PV-ADB4-EVO 2 ☐

PV-ADS4-EVO 2 ☐

Cable lug ☐

☐ Ø

☐ Ø

Isolation: ☐ without ☐ with

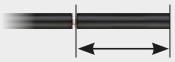

Partial stripping ☐

Length ☐ (max. 45 mm)

Not stripped ☐

Other ☐

www

Interactive form: www.staubli.com/electrical

> Downloads > Online-Forms

[1] Definition, see page 75

Definition of cable lengths

Cable lengths of cable assemblies

For ordering ready made leads, the cable length L is defined as in the examples shown below.

Female cable coupler

L

Male cable coupler

L

Cable lug

L

Female panel receptacle

L

Male panel receptacle

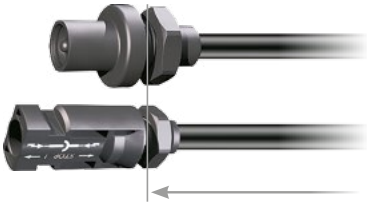

L

Complete or partial stripping

L

Ordering example:

32.1062-[2]*	MC3 female and male cable coupler Cable cross section: 2,5 mm²
32.1062-**050***	Cable length 50 cm
32.1062-050**21**	Cable colour black
32.1062-05021	Ready-made lead

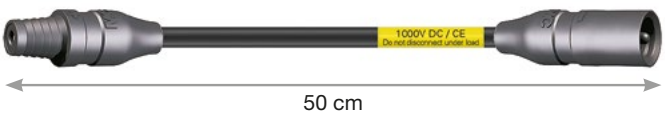

50 cm

Junction box PV-JB/WL-...

According to customer request

	Quantity	☐	**Order**	☐	**Quotation**		**Reference**

☐ **MC4**

☐ **PV-JB/WL-H**
☐ **PV-JB/WL-V**

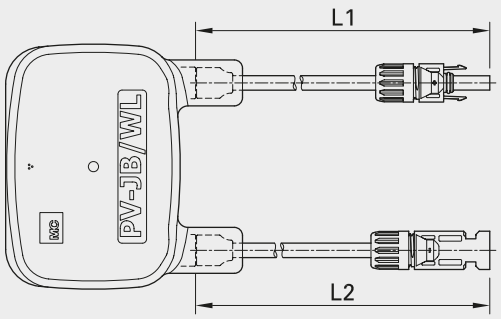

Cross section

4 mm²

Length in cm

L1 (min. 25 cm)

L2 (min. 25 cm)

Cable type

☐ **BETAflam®**
☐ **Byson**
☐ **Flex-Sol-Evo-TX**

☐ **MC4-Evo2**

☐ **PV-JB/WL-H**
☐ **PV-JB/WL-V**

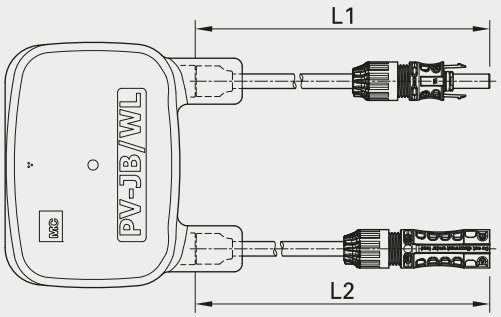

Cross section

4 mm²

Length in cm

L1 (min. 25 cm)

L2 (min. 25 cm)

Cable type

☐ **BETAflam®**
☐ **Byson**
☐ **Flex-Sol-Evo-TX**

Module current

I_{MPP}: A

Module short-circuit current

I_{SC}: A

Diode type

Other

Sender

Company

Name

Department

Address

Tel.

Fax

E-Mail

Date

Signature

www

Interactive form: **www.staubli.com/electrical**

> Downloads > Online-Forms

Innovations

MC4-Evo2 branch connector

1500 V DC, IP68

- With the MC4-Evo2 Stäubli is expanding its 1500-V portfolio.
- The new branch connector completes the MC4-Evo2 plug connector family
- MULTILAM technology
- For a secure and assembly-friendly parallel or parallel-serial cabling of PV modules
- Pluggable with a unipolar Stäubli PV connector from the MC4 connector family

PV-JB/BF

1000 V DC, 19 A, IP67/IP2X

- The PV-JB/BF requires no extended non-productive glass area as for example with a C-shaped cut.
- The slim PV-JB/BF can be mounted on the top without covering cells.
- Variable module thickness: 5-9 mm.
- Integrated MC4 mating faces allow to use just the requested cable length.
- The heat management of the PV-JB/BF allows a bypass current of 17 A with ribbons not exceeding 90 °C, which reduces EVA degradation.

Customized solutions

PV Junction box PV-JB-LC...

Technical data	
Rated voltage	1000 V DC (IEC)
Rated current	2.5 A – 10 A
Degree of protection, mated	IP65
Connection of the bus ribbons	Soldering
Installation	Adhesive pad Silicone
TÜV Rheinland certified, EN 50548 + A1	R60090328

APPENDIX

General information

Users wishing to employ products listed in the catalogue for applications we have not considered are themselves responsible for making certain that the products comply with standards other than those stated.

Changes / Provisos

All data, illustrations and drawings in the catalogue have been carefully checked. They are in accordance with our experience to date, but no responsibility can be accepted for errors.

We also reserve the right to make modifications for design and safety reasons. When designing equipment incorporating our components, it is therefore advisable not to rely solely on the data in the catalogue but to consult us to make sure this information is up to date. We shall be pleased to advise you.

Technical information

Crimped terminations
For termination of the conductors to the crimping sleeves of the PV plug connectors we recommend using the stated crimping tools. For UL certified products only the tools mentioned can be used for self-assembly according to the assembly instructions. The crimping sleeves are designed for highly flexible conductors of the stated cross-section ranges. The use of flexible conductors is possible. It is advantageous to use tinned conductors.

Connecting cables
To ensure that the cable outlets of the PV plug connectors are sufficiently watertight, connecting cables of the specified diameter ranges for the insulating casings must be used.

Laying conditions
When laying the PV leads, avoid having the connecting cable resting on a sharp edge at the exit from the PV connector. We recommend observing the minimum bending radius of the connecting cables.

Plugging cycles
The maximum life of the PV connectors is 100 plugging cycles.

Rated current
See derating diagram

Max. system voltage
Is the maximum voltage for which the components of the PV plug connector system may be used and are rated in accordance with IEC 60664-1.

Contact resistance
is the resistance at the point of contact between two contact surfaces.

Test voltage
Is the voltage at which the new components of the PV plug connector system are tested under defined conditions without breakdown or arcing.

Unplugging under load
PV plug connections must not be unplugged while under load. Plugging and unplugging while under tension is permitted.

Protection against weather
Sealing caps must be used to protect unplugged PV-connectors from moisture and dirt.

Positioning of the junction box
The junction box must be fixed on the PV module in such a position that the cable outlets of the junction box point downwards when in use.

Further technical data on leads

Smallest Permissible Bend Radii

VDE 0298, part 3, stipulates minimum permissible bend radii of leads. In the following table, the minimum bend radii are shown for fixed and mobile flexible leads.

Bend radi	
Rated voltage	> 600 V
Fixed	6 d
Mobile	10 d

d = Outside diameter of lead

Why tinned multistrand copperwires?

If bright-soft copper stranded wires are exposed to temperatures > 90 °C, this can result in discoloration of the copper and an impairment of its soldering properties. Reactions between the copper and the insulating material may also occur which have a deleterious effect on the mechanical properties of the flexible leads.

Nominal cross section	Conductor resistance
mm^2	Ω/km
1.5	13.3
2.5	7.98
4.0	4.95
6.0	3.30
10	1.91

Resistance of conductor at 20 °C for class 5 Cu conductors

The following table shows the conductor resistance for fine-stranded copper wires with bare individual strands at 20 °C inrelation to the nominal cross-section according to IEC/EN 60228.

Table mm² / AWG

The nominal cross-section of our multi-strand wires is stated in sq. mm. The following chart gives an indication of their comparability with corresponding AWG values.[1)]

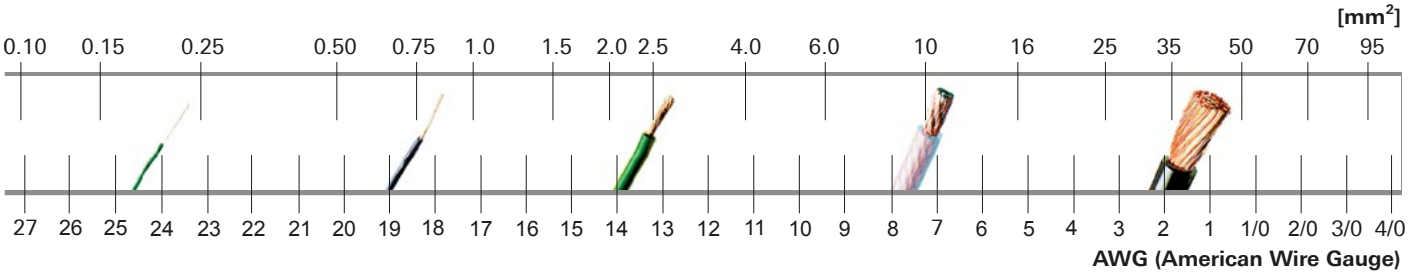

1) The chart is based on values for strandedwires given in UL 758 “UL Standard for Safety for Appliance Wiring Material”.

Index

Type	Page
FLEX-SOL-EVO-DX 2,5	50
FLEX-SOL-EVO-DX 4,0	50
FLEX-SOL-EVO-DX 6,0	50
FLEX-SOL-EVO-DX 10	50
FLEX-SOL-EVO-TX 2,5	52
FLEX-SOL-EVO-TX 4,0	52
FLEX-SOL-EVO-TX 6,0	52
FLEX-SOL-EVO-TX 10	52
MC-K1,5Y3/PV-AC1/BI/100	22
MC-K1,5Y3/PV-AC1/SI/100	22
MC-K1,5Z3/PV-AC1/BII/100	22
MC-K1,5Z3/PV-AC1/SII/100	22
MC-K2,5Y3/PV-AC1/BII/100	22
MC-K2,5Y3/PV-AC1/SII/100	22
MC-K2,5Z3/PV-AC1/BII/100	22
MC-K2,5Z3/PV-AC1/SII/100	22
MC-K4Y3/PV-AC1/BIII/100	22
MC-K4Y3/PV-AC1/SIII/100	22
MC-K4Z3/PV-AC1/BIII/100	22
MC-K4Z3/PV-AC1/SIII/100	22
PV-ADB4-EVO 2/2,5-UR	30, 32
PV-ADB4-EVO 2/6-UR	30, 32
PV-ADBP3/6/GWD	24
PV-ADBP3/GWD	24
PV-ADBP4/2,5	26, 28
PV-ADBP4/6	26, 28
PV-ADBP4-S2/10	26, 28
PV-ADS4-EVO 2/2,5-UR	30, 32
PV-ADS4-EVO 2/6-UR	30, 32
PV-ADSP3/6/GWD	24
PV-ADSP3/GWD	24
PV-ADSP4/2,5	26, 28
PV-ADSP4/6	26, 28
PV-ADSP4-S2/10	26, 28
PV-A-KBT3/KST4	59
PV-A-KBT4/KST3	59
PV-AMLB3/150	58
PV-AMLB4/150	58
PV-AMLS3/150	58
PV-AMLS4/150	58
PV-AWZ3	64
PV-AWZ3-KK	64
PV-AWZ3-ML	64
PV-AZB3-UR	34

Type	Page
PV-AZB4	36
PV-AZM-156	65, 70
PV-AZM-410	65, 70
PV-AZS3-UR	34
PV-AZS4	36
PV-BVK3	63
PV-BVK3-OL	63
PV-BVK4	63
PV-BVK-EVO AC	63
PV-CZ	66, 67
PV-CZM-16100A	66
PV-CZM-17100	66
PV-CZM-18100	66
PV-CZM-19100	66, 70
PV-CZM-20100	66
PV-CZM-21100	66
PV-CZM-22100	66
PV-CZM-40100	66
PV-CZM-41100	66
PV-CZM-42100	66
PV-CZM-BS	67
PV-ES-CZM-16100	66
PV-ES-CZM-17100	66
PV-ES-CZM-18100	66
PV-ES-CZM-19100	66
PV-ES-CZM-20100	66
PV-ES-CZM-21100	66
PV-ES-CZM-22100	66
PV-ES-CZM-40100	66
PV-ES-CZM-41100	66
PV-ES-CZM-42100	66
PV-EVO-PST	61
PV-JB/MF	46
PV-JB/MF-U01	46
PV-JB/MF-U02	46
PV-JB/TB-BT4-UR	48
PV-JB/TB-ST4-UR	48
PV-JB/WL-H-02-B-C	42
PV-JB/WL-H-02-B-WS	42
PV-JB/WL-H-02-D-C	42
PV-JB/WL-H-02-D-WS	42
PV-JB/WL-H-02-F-C	42
PV-JB/WL-H-02-F-WS	42
PV-JB/WL-V-02-B-C	44

Type	Page
PV-JB/WL-V-02-B-WS	44
PV-JB/WL-V-02-D-C	44
PV-JB/WL-V-02-D-WS	44
PV-JB/WL-V-02-F-C	44
PV-JB/WL-V-02-F-WS	44
PV-K/1500ILF4/6N0050UL	54
PV-K/1500ILF10/6N0050UL	54
PV-K/1500ILF15/6N0050UL	54
PV-K/1500ILF20/6N0050UL	54
PV-K/BC...	56
PV-KBT3/6IIA	12
PV-KBT3/6III-UR	12
PV-KBT3III-UR	12
PV-KBT3II-UR	12
PV-KBT3I-UR	12
PV-KBT3IV	12
PV-KBT3-P AU	60
PV-KBT4/2,5II-UR	14, 16
PV-KBT4/2,5I-UR	14, 16
PV-KBT4/2,5X-UR	14, 16
PV-KBT4/6II-UR	14, 16
PV-KBT4/6I-UR	14, 16
PV-KBT4/6X-UR	14, 16
PV-KBT4/8II-UR	14
PV-KBT4/10II	14, 16
PV-KBT4-EVO 2/2,5II-UR	18, 20
PV-KBT4-EVO 2/2,5I-UR	18, 20
PV-KBT4-EVO 2/6II-UR	18, 20
PV-KBT4-EVO 2/6I-UR	18, 20
PV-KBT4-EVO 2/10II-UR	18, 20
PV-KBT4II-P AU	60
PV-K/ILF4/6N0050UL	54
PV-K/ILF10/6N0050UL	54
PV-K/ILF15/6N0050UL	54
PV-K/ILF20/6N0050UL	54
PV-K/ILF30/6N0050UL	54
PV-KO 2,5-4	64
PV-KO 6	64
PV-KO 10	64
PV-KST3/6IIA	12
PV-KST3/6III-UR	12
PV-KST3III-UR	12
PV-KST3II-UR	12
PV-KST3I-UR	12

Type	Page
PV-KST3IV	12
PV-KST3-P AU	60
PV-KST4/2,5II-UR	14, 16
PV-KST4/2,5I-UR	14, 16
PV-KST4/2,5X-UR	14, 16
PV-KST4/6II-UR	14, 16
PV-KST4/6I-UR	14, 16
PV-KST4/6X-UR	14, 16
PV-KST4/8II-UR	14
PV-KST4/10II	14, 16
PV-KST4-EVO 2/2,5II-UR	18, 20
PV-KST4-EVO 2/2,5I-UR	18, 20
PV-KST4-EVO 2/6II-UR	18, 20
PV-KST4-EVO 2/6I-UR	18, 20
PV-KST4-EVO 2/10II-UR	18, 20
PV-KST4II-P AU	60
PV-LOC	66
PV-LOC-A	66
PV-LOC-A10	66
PV-LOC-B	66
PV-M-AZM-156	65
PV-M-AZM-410	65
PV-MS	69, 70
PV-MS-EVO AC	69
PV-MS-PLS	69
PV-MS-PLS/G	69
PV-PST	61
PV-SSE-AD4	68, 70
PV-SVK3	63
PV-SVK3-OL	63
PV-SVK4	63
PV-SVK-EVO AC	63
PV-WZ4-SET	70
PV-WZ-AD/GWD	68, 70

PV Sol Main 11014092-en D 07.2017

■ Stäubli Units ○ Agents

Global presence of the Stäubli Group

www.staubli.com/contacts

Staubli is a trademark of Stäubli International AG, registered in Switzerland and other countries.
We reserve the right to modify product specifications without prior notice. © Stäubli 2017.
ec.marcom@staubli.com | Photo credits: Stäubli, Shutterstock.com, Gettyimages.com
Printed in Germany

STÄUBLI